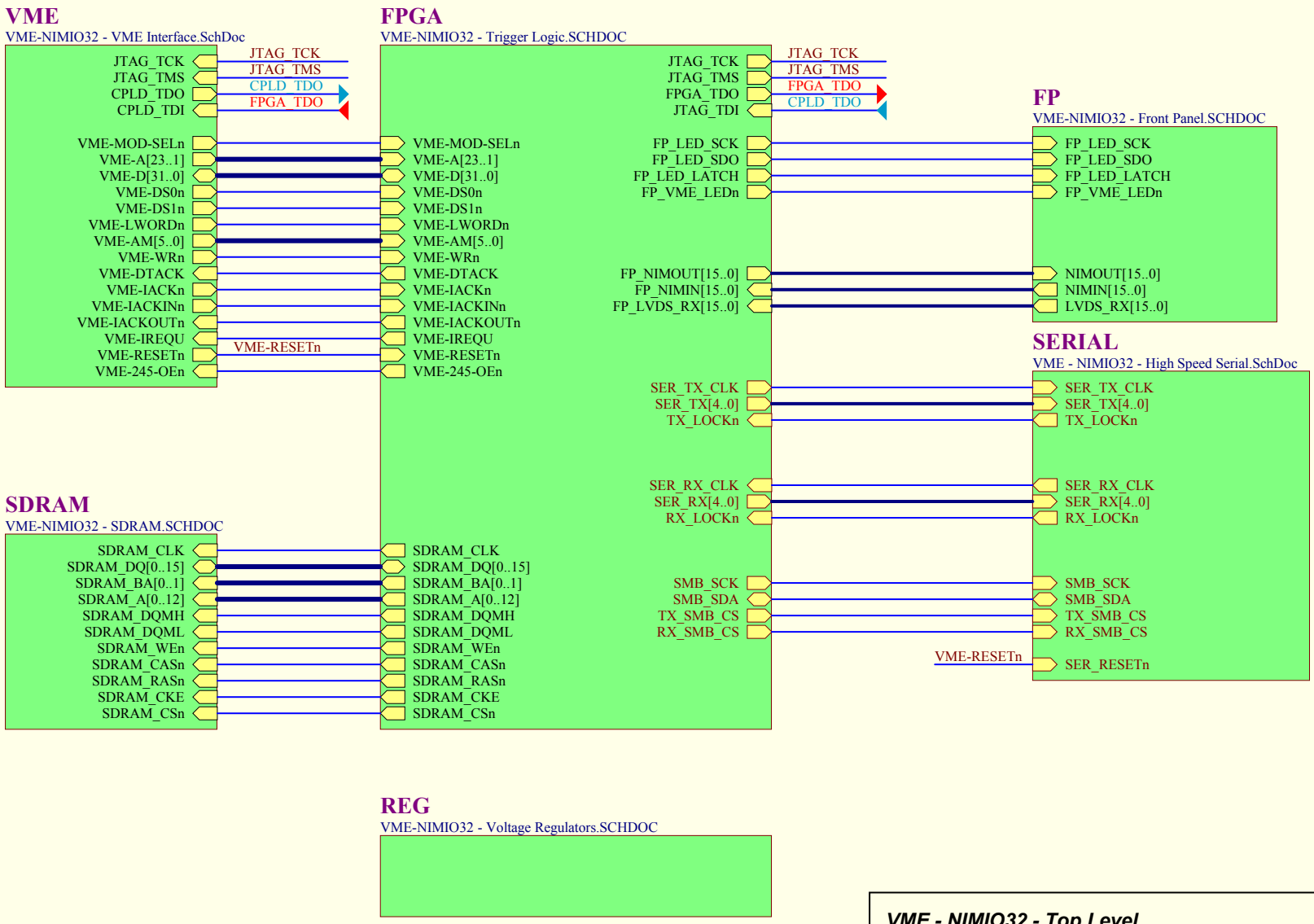


***VME - NIMIO32 - Top Level***

TRIUMF LOGO

| | | | |
|---|---|---|---|
| Revision **0** | Drawing #: 1 | | *TRIUMF* 4004 Wesbrook Mall Vancouver, B.C. Canada V6T 2A3 |
| | Sheet #: 1 of 14 | Size: A | |
| | Drawn by: D.Bishop | Date: 15/10/2009 | |
| File: G:\AHW\VME-NIMIO32\ALTIUM\Altium\VME-NIMIO32 - Top Level.SCHDOC | | | 6:39:14 PM |

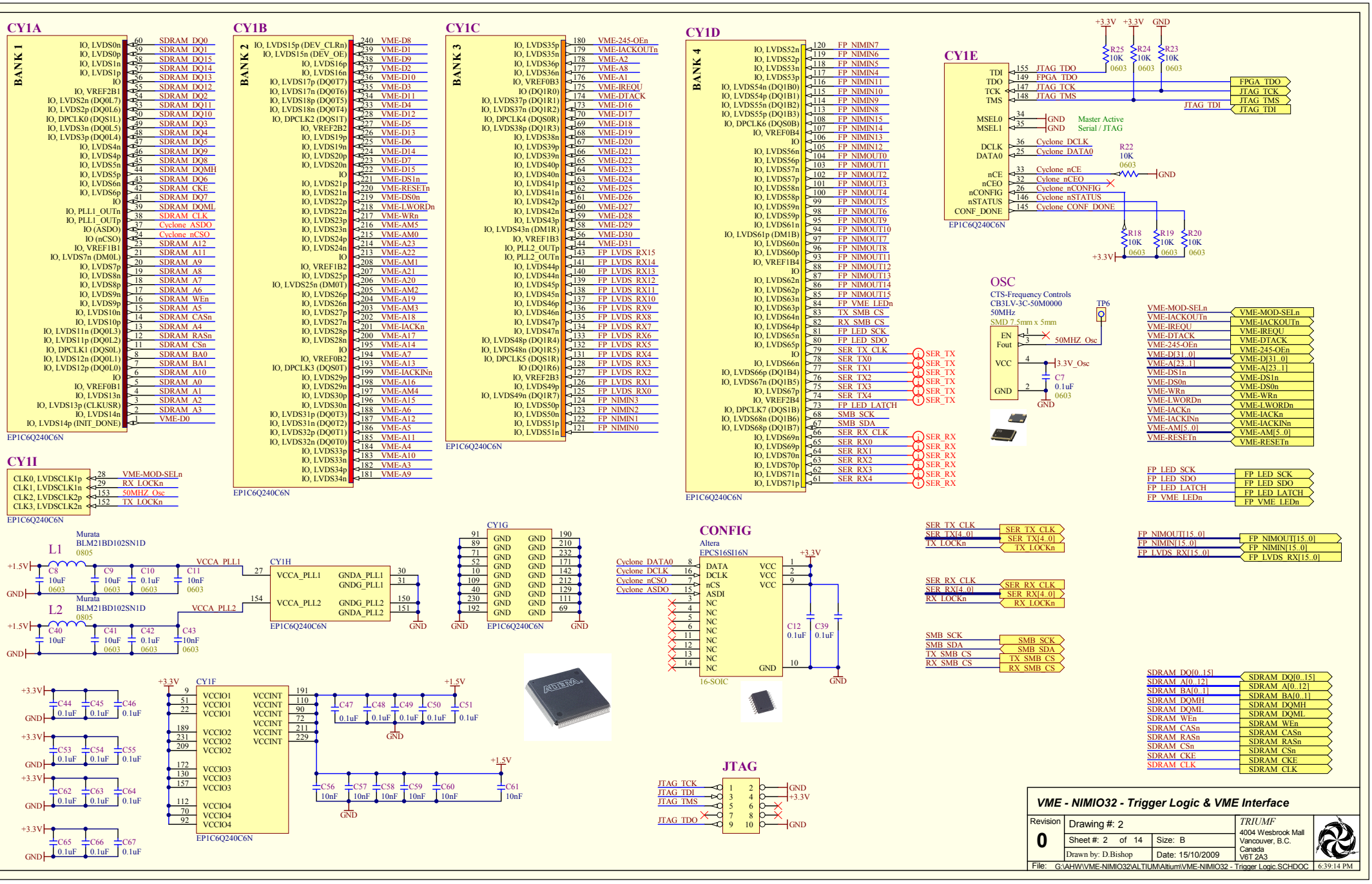
CY1A
BANK 1
IO, LVDS0n
IO, LVDS0p
IO, LVDS1n
IO, LVDS1p
IO
IO, VREF2B1
IO, LVDS2n (DQ0L7)
IO, LVDS2p (DQ0L6)
IO, DPCLK0 (DQS1L)
IO, LVDS3n (DQ0L5)
IO, LVDS3p (DQ0L4)
IO, LVDS4n
IO, LVDS4p
IO, LVDS5n
IO, LVDS5p
IO, LVDS6n
IO, LVDS6p
IO
IO, PLL1_OUTn
IO, PLL1_OUTp
IO (ASDO)
IO (nCSO)
IO, VREF1B1
IO, LVDS7n (DM0L)
IO, LVDS7p
IO, LVDS8n
IO, LVDS8p
IO, LVDS9n
IO, LVDS9p
IO, LVDS10n
IO, LVDS10p
IO, LVDS11n (DQ0L3)
IO, LVDS11p (DQ0L2)
IO, DPCLK1 (DQS0L)
IO, LVDS12n (DQ0L1)
IO, LVDS12p (DQ0L0)
IO
IO, VREF0B1
IO, LVDS13n
IO, LVDS13p (CLKUSR)
IO, LVDS14n
IO, LVDS14p (INIT_DONE)
60 SDRAM_DQ0
59 SDRAM_DQ1
58 SDRAM_DQ15
57 SDRAM_DQ14
56 SDRAM_DQ13
55 SDRAM_DQ12
54 SDRAM_DQ2
53 SDRAM_DQ11
50 SDRAM_DQ10
49 SDRAM_DQ3
48 SDRAM_DQ4
47 SDRAM_DQ5
46 SDRAM_DQ9
45 SDRAM_DQ8
44 SDRAM_DQMH
43 SDRAM_DQ6
42 SDRAM_CKE
41 SDRAM_DQ7
39 SDRAM_DQML
38 SDRAM_CLK
37 Cyclone_ASDO
24 Cyclone_nCSO
23 SDRAM_A12
21 SDRAM_A11
20 SDRAM_A9
19 SDRAM_A8
18 SDRAM_A7
17 SDRAM_A6
16 SDRAM_WEn
15 SDRAM_A5
14 SDRAM_CASn
13 SDRAM_A4
12 SDRAM_RASn
11 SDRAM_CSn
8 SDRAM_BA0
7 SDRAM_BA1
6 SDRAM_A10
5 SDRAM_A0
4 SDRAM_A1
3 SDRAM_A2
2 SDRAM_A3
1 VME-D0
EP1C6Q240C6N
CY1B
BANK 2
IO, LVDS15p (DEV_CLRn)
IO, LVDS15n (DEV_OE)
IO, LVDS16p
IO, LVDS16n
IO, LVDS17p (DQ0T7)
IO, LVDS17n (DQ0T6)
IO, LVDS18p (DQ0T5)
IO, LVDS18n (DQ0T4)
IO, DPCLK2 (DQS1T)
IO, VREF2B2
IO, LVDS19p
IO, LVDS19n
IO, LVDS20p
IO, LVDS20n
IO
IO, LVDS21p
IO, LVDS21n
IO, LVDS22p
IO, LVDS22n
IO, LVDS23p
IO, LVDS23n
IO, LVDS24p
IO, LVDS24n
IO
IO, VREF1B2
IO, LVDS25p
IO, LVDS25n (DM0T)
IO, LVDS26p
IO, LVDS26n
IO, LVDS27p
IO, LVDS27n
IO, LVDS28p
IO, LVDS28n
IO
IO, VREF0B2
IO, DPCLK3 (DQS0T)
IO, LVDS29p
IO, LVDS29n
IO, LVDS30p
IO, LVDS30n
IO, LVDS31p (DQ0T3)
IO, LVDS31n (DQ0T2)
IO, LVDS32p (DQ0T1)
IO, LVDS32n (DQ0T0)
IO, LVDS33p
IO, LVDS33n
IO, LVDS34p
IO, LVDS34n
240 VME-D8
239 VME-D1
238 VME-D9
237 VME-D2
236 VME-D10
235 VME-D3
234 VME-D11
233 VME-D4
228 VME-D12
227 VME-D5
226 VME-D13
225 VME-D6
224 VME-D14
223 VME-D7
222 VME-D15
221 VME-DS1n
220 VME-RESETn
219 VME-DS0n
218 VME-LWORDn
217 VME-WRn
216 VME-AM5
215 VME-AM0
214 VME-A23
213 VME-A22
208 VME-AM1
207 VME-A21
206 VME-A20
205 VME-AM2
204 VME-A19
203 VME-AM3
202 VME-A18
201 VME-IACKn
200 VME-A17
195 VME-A14
194 VME-A7
193 VME-A13
199 VME-IACKINn
198 VME-A16
197 VME-AM4
196 VME-A15
188 VME-A6
187 VME-A12
186 VME-A5
185 VME-A11
184 VME-A4
183 VME-A10
182 VME-A3
181 VME-A9
EP1C6Q240C6N
CY1C
BANK 3
IO, LVDS35p
IO, LVDS35n
IO, LVDS36p
IO, LVDS36n
IO, VREF0B3
IO (DQ1R0)
IO, LVDS37p (DQ1R1)
IO, LVDS37n (DQ1R2)
IO, DPCLK4 (DQS0R)
IO, LVDS38p (DQ1R3)
IO, LVDS38n
IO, LVDS39p
IO, LVDS39n
IO, LVDS40p
IO, LVDS40n
IO, LVDS41p
IO, LVDS41n
IO, LVDS42p
IO, LVDS42n
IO, LVDS43p
IO, LVDS43n (DM1R)
IO, VREF1B3
IO, PLL2_OUTp
IO, PLL2_OUTn
IO, LVDS44p
IO, LVDS44n
IO, LVDS45p
IO, LVDS45n
IO, LVDS46p
IO, LVDS46n
IO, LVDS47p
IO, LVDS47n
IO, LVDS48p (DQ1R4)
IO, LVDS48n (DQ1R5)
IO, DPCLK5 (DQS1R)
IO (DQ1R6)
IO, VREF2B3
IO, LVDS49p
IO, LVDS49n (DQ1R7)
IO, LVDS50p
IO, LVDS50n
IO, LVDS51p
IO, LVDS51n
180 VME-245-OEn
179 VME-IACKOUTn
178 VME-A2
177 VME-A8
176 VME-A1
175 VME-IREQU
174 VME-DTACK
173 VME-D16
170 VME-D17
169 VME-D18
168 VME-D19
167 VME-D20
166 VME-D21
165 VME-D22
164 VME-D23
163 VME-D24
162 VME-D25
161 VME-D26
160 VME-D27
159 VME-D28
158 VME-D29
156 VME-D30
144 VME-D31
143 FP_LVDS_RX15
141 FP_LVDS_RX14
140 FP_LVDS_RX13
139 FP_LVDS_RX12
138 FP_LVDS_RX11
137 FP_LVDS_RX10
136 FP_LVDS_RX9
135 FP_LVDS_RX8
134 FP_LVDS_RX7
133 FP_LVDS_RX6
132 FP_LVDS_RX5
131 FP_LVDS_RX4
128 FP_LVDS_RX3
127 FP_LVDS_RX2
126 FP_LVDS_RX1
125 FP_LVDS_RX0
124 FP_NIMIN3
123 FP_NIMIN2
122 FP_NIMIN1
121 FP_NIMIN0
EP1C6Q240C6N
CY1D
BANK 4
IO, LVDS52n
IO, LVDS52p
IO, LVDS53n
IO, LVDS53p
IO, LVDS54n (DQ1B0)
IO, LVDS54p (DQ1B1)
IO, LVDS55n (DQ1B2)
IO, LVDS55p (DQ1B3)
IO, DPCLK6 (DQS0B)
IO, VREF0B4
IO
IO, LVDS56n
IO, LVDS56p
IO, LVDS57n
IO, LVDS57p
IO, LVDS58n
IO, LVDS58p
IO, LVDS59n
IO, LVDS59p
IO, LVDS61n
IO, LVDS61p (DM1B)
IO, LVDS60n
IO, LVDS60p
IO, VREF1B4
IO
IO, LVDS62n
IO, LVDS62p
IO, LVDS63n
IO, LVDS63p
IO, LVDS64n
IO, LVDS64p
IO, LVDS65n
IO, LVDS65p
IO
IO, LVDS66n
IO, LVDS66p (DQ1B4)
IO, LVDS67n (DQ1B5)
IO, LVDS67p
IO, VREF2B4
IO, DPCLK7 (DQS1B)
IO, LVDS68n (DQ1B6)
IO, LVDS68p (DQ1B7)
IO, LVDS69n
IO, LVDS69p
IO, LVDS70n
IO, LVDS70p
IO, LVDS71n
IO, LVDS71p
120 FP_NIMIN7
119 FP_NIMIN6
118 FP_NIMIN5
117 FP_NIMIN4
116 FP_NIMIN11
115 FP_NIMIN10
114 FP_NIMIN9
113 FP_NIMIN8
108 FP_NIMIN15
107 FP_NIMIN14
106 FP_NIMIN13
105 FP_NIMIN12
104 FP_NIMOUT0
103 FP_NIMOUT1
102 FP_NIMOUT2
101 FP_NIMOUT3
100 FP_NIMOUT4
99 FP_NIMOUT5
98 FP_NIMOUT6
95 FP_NIMOUT9
94 FP_NIMOUT10
97 FP_NIMOUT7
96 FP_NIMOUT8
93 FP_NIMOUT11
88 FP_NIMOUT12
87 FP_NIMOUT13
86 FP_NIMOUT14
85 FP_NIMOUT15
84 FP_VME_LEDn
83 TX_SMB_CS
82 RX_SMB_CS
81 FP_LED_SCK
80 FP_LED_SDO
79 SER_TX_CLK
78 SER_TX0
77 SER_TX1
76 SER_TX2
75 SER_TX3
74 SER_TX4
73 FP_LED_LATCH
68 SMB_SCK
67 SMB_SDA
66 SER_RX_CLK
65 SER_RX0
64 SER_RX1
63 SER_RX2
62 SER_RX3
61 SER_RX4
SER_TX
SER_RX
EP1C6Q240C6N
CY1E
TDI
TDO
TCK
TMS
MSEL0
MSEL1
DCLK
DATA0
nCE
nCEO
nCONFIG
nSTATUS
CONF_DONE
155 JTAG_TDO
149 FPGA_TDO
147 JTAG_TCK
148 JTAG_TMS
JTAG_TDI
34 GND Master Active
35 GND Serial / JTAG
36 Cyclone_DCLK
25 Cyclone_DATA0
33 Cyclone_nCE
32 Cyclone_nCEO
26 Cyclone_nCONFIG
146 Cyclone_nSTATUS
145 Cyclone_CONF_DONE
+3.3V +3.3V GND
R25 10K 0603
R24 10K 0603
R23 10K 0603
FPGA_TDO
JTAG_TCK
JTAG_TMS
JTAG_TDI
R22 10K 0603
GND
R18 10K 0603
R19 10K 0603
R20 10K 0603
+3.3V
EP1C6Q240C6N
OSC
CTS-Frequency Controls
CB3LV-3C-50M0000
50MHz
SMD 7.5mm x 5mm
EN
Fout
VCC
GND
50MHZ_Osc
3.3V_Osc
C7 0.1uF 0603
TP6
CY1I
CLK0, LVDSCLK1p
CLK1, LVDSCLK1n
CLK2, LVDSCLK2p
CLK3, LVDSCLK2n
28 VME-MOD-SELn
29 RX_LOCKn
153 50MHZ_Osc
152 TX_LOCKn
EP1C6Q240C6N
CY1G
GND
EP1C6Q240C6N
CY1H
VCCA_PLL1
VCCA_PLL2
GNDA_PLL1
GNDG_PLL1
GNDG_PLL2
GNDA_PLL2
L1 Murata BLM21BD102SN1D 0805
L2 Murata BLM21BD102SN1D 0805
+1.5V
GND
C8 10uF 0603
C9 10uF 0603
C10 0.1uF 0603
C11 10nF 0603
C40 10uF
C41 10uF 0603
C42 0.1uF 0603
C43 10nF 0603
CONFIG
Altera
EPCS16SI16N
DATA
DCLK
nCS
ASDI
NC
VCC
GND
Cyclone_DATA0
Cyclone_DCLK
Cyclone_nCSO
Cyclone_ASDO
+3.3V
C12 0.1uF
C39 0.1uF
16-SOIC
SER_TX_CLK
SER_TX[4..0]
TX_LOCKn
SER_RX_CLK
SER_RX[4..0]
RX_LOCKn
SMB_SCK
SMB_SDA
TX_SMB_CS
RX_SMB_CS
VME-MOD-SELn
VME-IACKOUTn
VME-IREQU
VME-DTACK
VME-245-OEn
VME-D[31..0]
VME-A[23..1]
VME-DS1n
VME-DS0n
VME-WRn
VME-LWORDn
VME-IACKn
VME-IACKINn
VME-AM[5..0]
VME-RESETn
FP_LED_SCK
FP_LED_SDO
FP_LED_LATCH
FP_VME_LEDn
FP_NIMOUT[15..0]
FP_NIMIN[15..0]
FP_LVDS_RX[15..0]
SDRAM_DQ[0..15]
SDRAM_A[0..12]
SDRAM_BA[0..1]
SDRAM_DQMH
SDRAM_DQML
SDRAM_WEn
SDRAM_CASn
SDRAM_RASn
SDRAM_CSn
SDRAM_CKE
SDRAM_CLK
CY1F
VCCIO1
VCCIO2
VCCIO3
VCCIO4
VCCINT
+3.3V
+1.5V
C44 C45 C46 0.1uF
C53 C54 C55 0.1uF
C62 C63 C64 0.1uF
C65 C66 C67 0.1uF
C47 C48 C49 C50 C51 0.1uF
C56 C57 C58 C59 C60 C61 10nF
EP1C6Q240C6N
JTAG
JTAG_TCK
JTAG_TDI
JTAG_TMS
JTAG_TDO
+3.3V
GND
VME - NIMIO32 - Trigger Logic & VME Interface
Revision 0
Drawing #: 2
Sheet #: 2 of 14
Size: B
Drawn by: D.Bishop
Date: 15/10/2009
TRIUMF
4004 Wesbrook Mall
Vancouver, B.C.
Canada
V6T 2A3
File: G:\AHW\VME-NIMIO32\ALTIUM\Altium\VME-NIMIO32 - Trigger Logic.SCHDOC
6:39:14 PM

SDRAM_DQ[0..15] SDRAM_DQ[0..15]
SDRAM_A[0..12] SDRAM_A[0..12]
SDRAM_BA[0..1] SDRAM_BA[0..1]
SDRAM_DQMH SDRAM_DQMH
SDRAM_DQML SDRAM_DQML
SDRAM_WEn SDRAM_WEn
SDRAM_CASn SDRAM_CASn
SDRAM_RASn SDRAM_RASn
SDRAM_CSn SDRAM_CSn
SDRAM_CKE SDRAM_CKE
SDRAM_CLK SDRAM_CLK

+3.3V

R60 10K 0603
R61 10K 0603
R62 10K 0603
R63 10K 0603

**U27**
MICRON TECHNOLOGY INC
MT48LC4M16A2TG-75

| | | | |
|---|---|---|---|
| SDRAM_CKE | 37 | CKE | |
| SDRAM_CLK | 38 | CLK | |
| SDRAM_CSn | 19 | $\overline{CS}$ | |
| SDRAM_WEn | 16 | $\overline{WE}$ | |
| SDRAM_CASn | 17 | $\overline{CAS}$ | |
| SDRAM_RASn | 18 | $\overline{RAS}$ | |
| SDRAM_A0 | 23 | A0 | |
| SDRAM_A1 | 24 | A1 | |
| SDRAM_A2 | 25 | A2 | |
| SDRAM_A3 | 26 | A3 | |
| SDRAM_A4 | 29 | A4 | |
| SDRAM_A5 | 30 | A5 | |
| SDRAM_A6 | 31 | A6 | |
| SDRAM_A7 | 32 | A7 | |
| SDRAM_A8 | 33 | A8 | |
| SDRAM_A9 | 34 | A9 | |
| SDRAM_A10 | 22 | A10 | |
| SDRAM_A11 | 35 | A11 | |
| SDRAM_A12 | 36 | A12 | |
| SDRAM_BA0 | 20 | BA0 | |
| SDRAM_BA1 | 21 | BA1 | |
| | | NC | 40 |
| SDRAM_DQML | 15 | DQML | |
| SDRAM_DQMH | 39 | DQMH | |
| SDRAM_DQ0 | 2 | DQ0 | |
| SDRAM_DQ1 | 4 | DQ1 | |
| SDRAM_DQ2 | 5 | DQ2 | |
| SDRAM_DQ3 | 7 | DQ3 | |
| SDRAM_DQ4 | 8 | DQ4 | |
| SDRAM_DQ5 | 10 | DQ5 | |
| SDRAM_DQ6 | 11 | DQ6 | |
| SDRAM_DQ7 | 13 | DQ7 | |
| SDRAM_DQ8 | 42 | DQ8 | |
| SDRAM_DQ9 | 44 | DQ9 | |
| SDRAM_DQ10 | 45 | DQ10 | |
| SDRAM_DQ11 | 47 | DQ11 | |
| SDRAM_DQ12 | 48 | DQ12 | |
| SDRAM_DQ13 | 50 | DQ13 | |
| SDRAM_DQ14 | 51 | DQ14 | |
| SDRAM_DQ15 | 53 | DQ15 | |

VDD: 1, 14, 27, 3, 9, 43, 49
VDDQ: 1, 14, 27, 3, 9, 43, 49
VSS: 28, 41, 54, 6, 12, 46, 52
VSSQ: 28, 41, 54, 6, 12, 46, 52

TSOP2-54

+3.3V
C137 0.1uF 0603
C138 0.1uF 0603
C139 0.1uF 0603
C140 0.1uF 0603
C141 0.1uF 0603
C142 0.1uF 0603
C143 0.1uF 0603
GND

+3.3V
C144 10nF 0603
C145 10nF 0603
C106 10nF 0603
C107 10nF 0603
C108 10nF 0603
C109 10nF 0603
C110 10nF 0603
GND

## VME - NIMIO32 - SDRAM

| | | | |
|---|---|---|---|
| Revision 0 | Drawing #: 3 | | TRIUMF<br>4004 Wesbrook Mall<br>Vancouver, B.C.<br>Canada<br>V6T 2A3 |
| | Sheet #: 3 of 14 | Size: A | |
| | Drawn by: D.Bishop | Date: 15/10/2009 | |
| File: G:\AHW\VME-NIMIO32\ALTIUM\Altium\VME-NIMIO32 - SDRAM.SCHDOC | | | 6:39:14 PM |

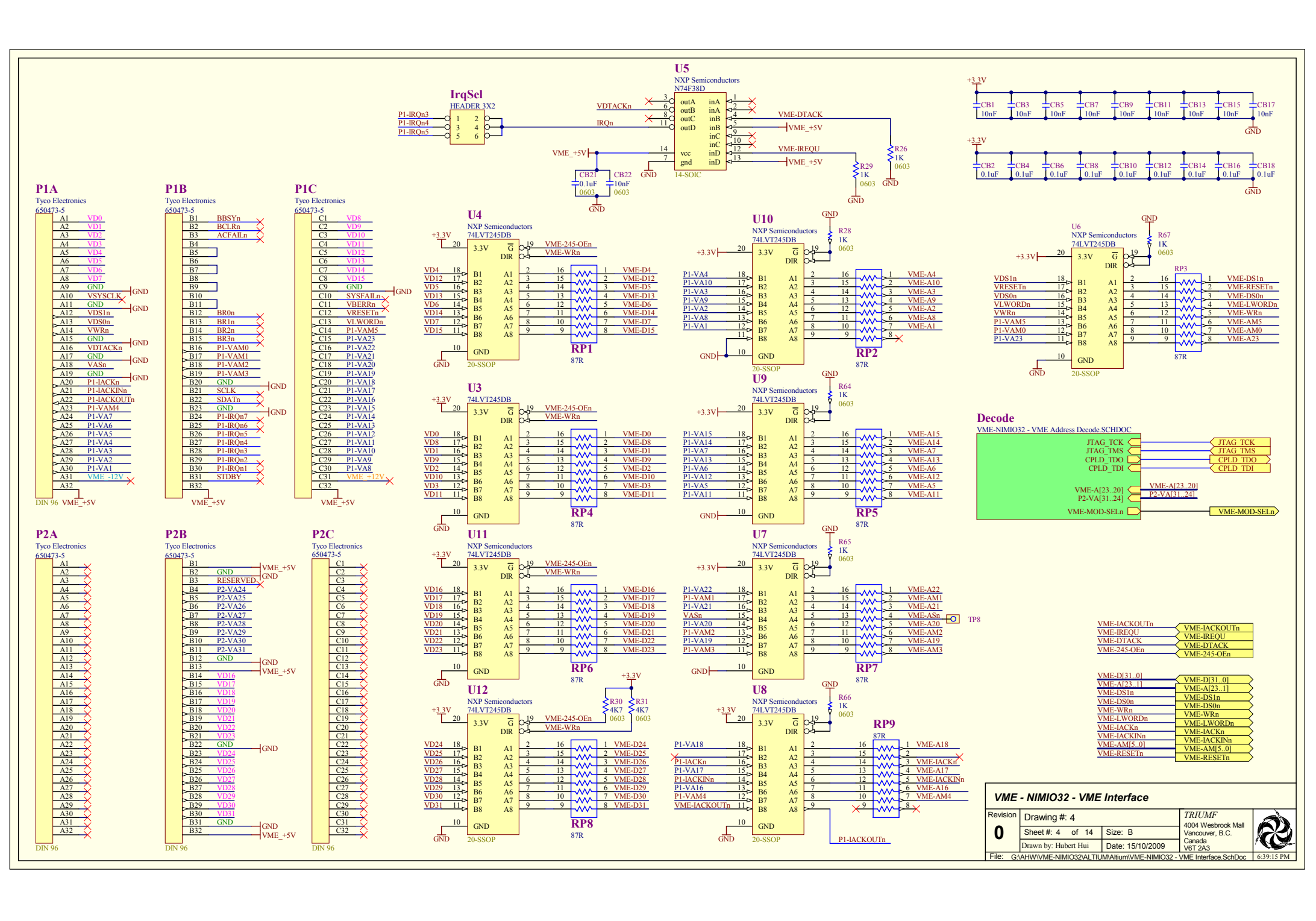
P1A
Tyco Electronics
650473-5
P1B
Tyco Electronics
650473-5
P1C
Tyco Electronics
650473-5
P2A
Tyco Electronics
650473-5
P2B
Tyco Electronics
650473-5
P2C
Tyco Electronics
650473-5
DIN 96
VME_+5V
IrqSel
HEADER 3X2
U5
NXP Semiconductors
N74F38D
14-SOIC
U4
NXP Semiconductors
74LVT245DB
20-SSOP
RP1
87R
U3
74LVT245DB
RP4
U11
RP6
U12
RP8
U10
RP2
U9
RP5
U7
RP7
U8
RP9
U6
RP3
R26
R29
R28
R67
R64
R65
R66
R30
R31
CB1
CB2
CB3
CB4
CB5
CB6
CB7
CB8
CB9
CB10
CB11
CB12
CB13
CB14
CB15
CB16
CB17
CB18
CB21
CB22
Decode
VME-NIMIO32 - VME Address Decode.SCHDOC
JTAG_TCK
JTAG_TMS
CPLD_TDO
CPLD_TDI
VME-A[23..20]
P2-VA[31..24]
VME-MOD-SELn
VME-IACKOUTn
VME-IREQU
VME-DTACK
VME-245-OEn
VME-D[31..0]
VME-A[23..1]
VME-DS1n
VME-DS0n
VME-WRn
VME-LWORDn
VME-IACKn
VME-IACKINn
VME-AM[5..0]
VME-RESETn
TP8
VME - NIMIO32 - VME Interface
Revision
0
Drawing #: 4
Sheet #: 4 of 14
Size: B
Drawn by: Hubert Hui
Date: 15/10/2009
TRIUMF
4004 Wesbrook Mall
Vancouver, B.C.
Canada
V6T 2A3
File: G:\AHW\VME-NIMIO32\ALTIUM\Altium\VME-NIMIO32 - VME Interface.SchDoc
6:39:15 PM

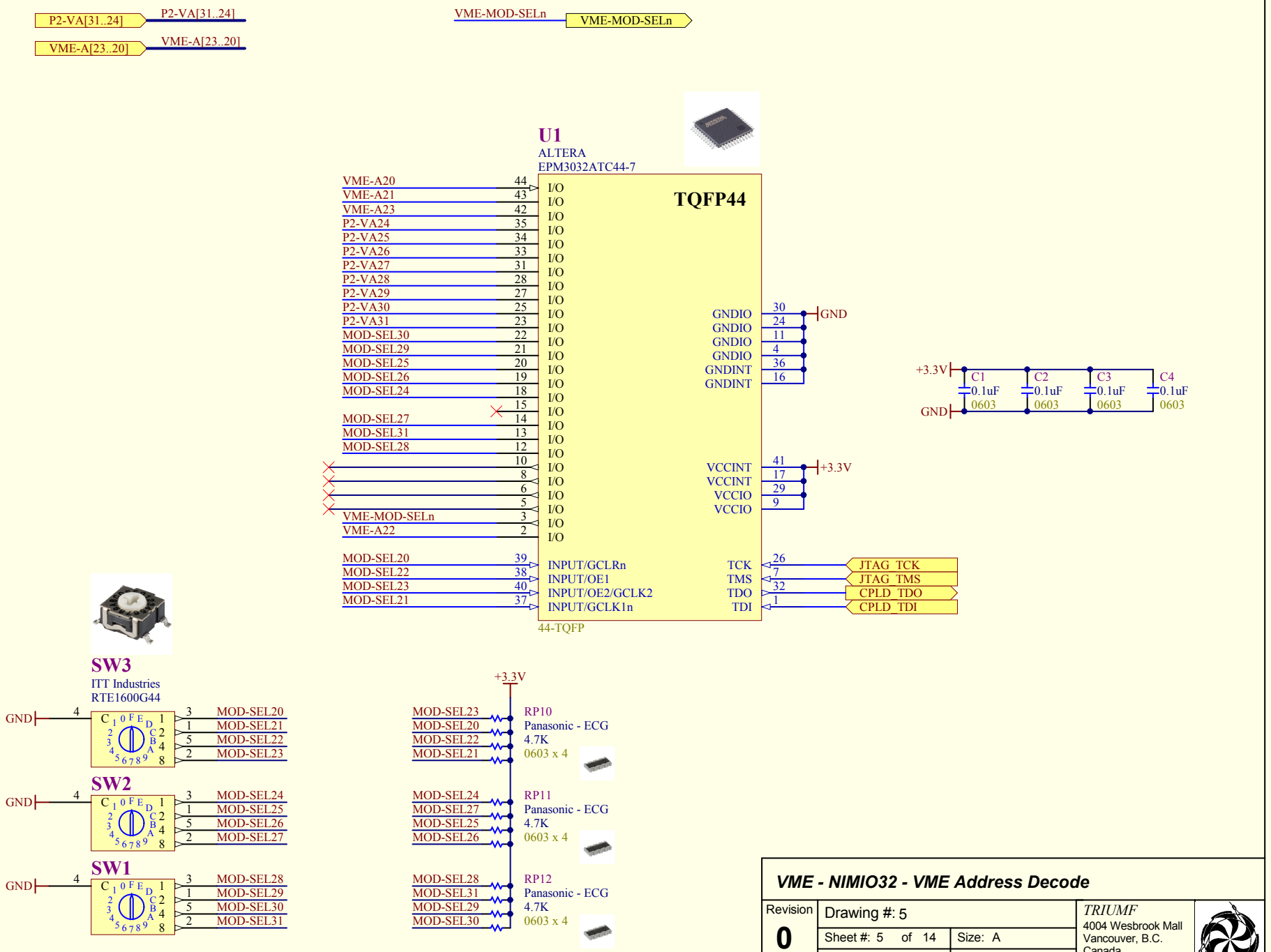
P2-VA[31..24]
VME-A[23..20]
VME-MOD-SELn
U1
ALTERA
EPM3032ATC44-7
TQFP44
VME-A20
VME-A21
VME-A23
P2-VA24
P2-VA25
P2-VA26
P2-VA27
P2-VA28
P2-VA29
P2-VA30
P2-VA31
MOD-SEL30
MOD-SEL29
MOD-SEL25
MOD-SEL26
MOD-SEL24
MOD-SEL27
MOD-SEL31
MOD-SEL28
VME-MOD-SELn
VME-A22
MOD-SEL20
MOD-SEL22
MOD-SEL23
MOD-SEL21
I/O
INPUT/GCLRn
INPUT/OE1
INPUT/OE2/GCLK2
INPUT/GCLK1n
GNDIO
GNDINT
VCCINT
VCCIO
TCK
TMS
TDO
TDI
GND
+3.3V
JTAG_TCK
JTAG_TMS
CPLD_TDO
CPLD_TDI
C1 0.1uF 0603
C2 0.1uF 0603
C3 0.1uF 0603
C4 0.1uF 0603
44-TQFP
SW3
ITT Industries
RTE1600G44
SW2
SW1
RP10
Panasonic - ECG
4.7K
0603 x 4
RP11
RP12
VME - NIMIO32 - VME Address Decode
Revision
0
Drawing #: 5
Sheet #: 5 of 14
Size: A
Drawn by: D.Bishop
Date: 15/10/2009
TRIUMF
4004 Wesbrook Mall
Vancouver, B.C.
Canada
V6T 2A3
File: G:\AHW\VME-NIMIO32\ALTIUM\Altium\VME-NIMIO32 - VME Address Decode.SCHDOC

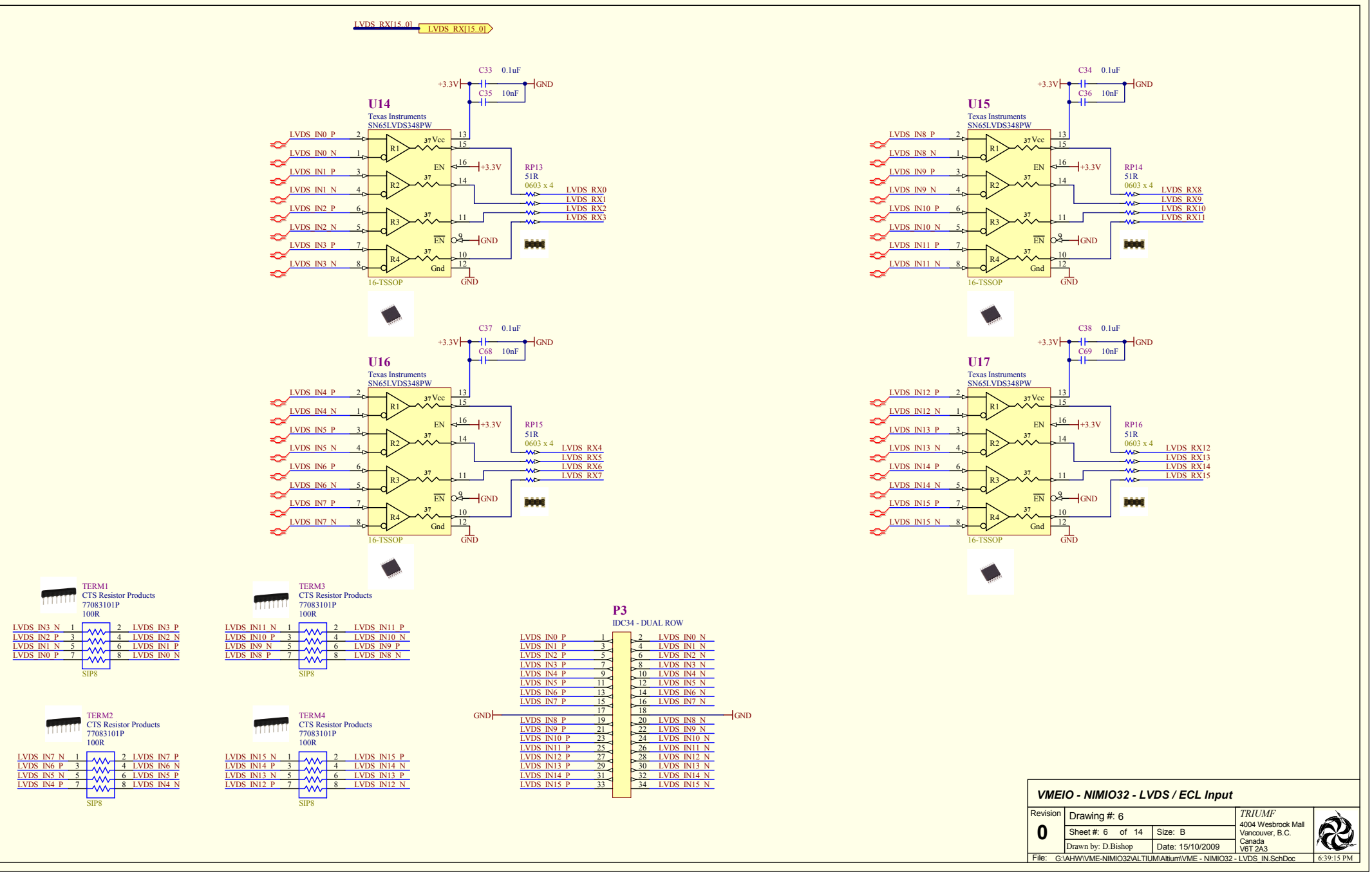
LVDS_RX[15..0]
LVDS_RX[15..0]
U14
Texas Instruments
SN65LVDS348PW
C33 0.1uF
C35 10nF
+3.3V
GND
LVDS_IN0_P
LVDS_IN0_N
LVDS_IN1_P
LVDS_IN1_N
LVDS_IN2_P
LVDS_IN2_N
LVDS_IN3_P
LVDS_IN3_N
R1
R2
R3
R4
Vcc
EN
Gnd
RP13
51R
0603 x 4
LVDS_RX0
LVDS_RX1
LVDS_RX2
LVDS_RX3
16-TSSOP
U15
Texas Instruments
SN65LVDS348PW
C34 0.1uF
C36 10nF
LVDS_IN8_P
LVDS_IN8_N
LVDS_IN9_P
LVDS_IN9_N
LVDS_IN10_P
LVDS_IN10_N
LVDS_IN11_P
LVDS_IN11_N
RP14
51R
0603 x 4
LVDS_RX8
LVDS_RX9
LVDS_RX10
LVDS_RX11
U16
Texas Instruments
SN65LVDS348PW
C37 0.1uF
C68 10nF
LVDS_IN4_P
LVDS_IN4_N
LVDS_IN5_P
LVDS_IN5_N
LVDS_IN6_P
LVDS_IN6_N
LVDS_IN7_P
LVDS_IN7_N
RP15
51R
0603 x 4
LVDS_RX4
LVDS_RX5
LVDS_RX6
LVDS_RX7
U17
Texas Instruments
SN65LVDS348PW
C38 0.1uF
C69 10nF
LVDS_IN12_P
LVDS_IN12_N
LVDS_IN13_P
LVDS_IN13_N
LVDS_IN14_P
LVDS_IN14_N
LVDS_IN15_P
LVDS_IN15_N
RP16
51R
0603 x 4
LVDS_RX12
LVDS_RX13
LVDS_RX14
LVDS_RX15
TERM1
CTS Resistor Products
77083101P
100R
SIP8
TERM3
CTS Resistor Products
77083101P
100R
SIP8
TERM2
CTS Resistor Products
77083101P
100R
SIP8
TERM4
CTS Resistor Products
77083101P
100R
SIP8
P3
IDC34 - DUAL ROW
VMEIO - NIMIO32 - LVDS / ECL Input
Revision
0
Drawing #: 6
Sheet #: 6 of 14
Size: B
Drawn by: D.Bishop
Date: 15/10/2009
TRIUMF
4004 Wesbrook Mall
Vancouver, B.C.
Canada
V6T 2A3
File: G:\AHW\VME-NIMIO32\ALTIUM\Altium\VME - NIMIO32 - LVDS_IN.SchDoc
6:39:15 PM

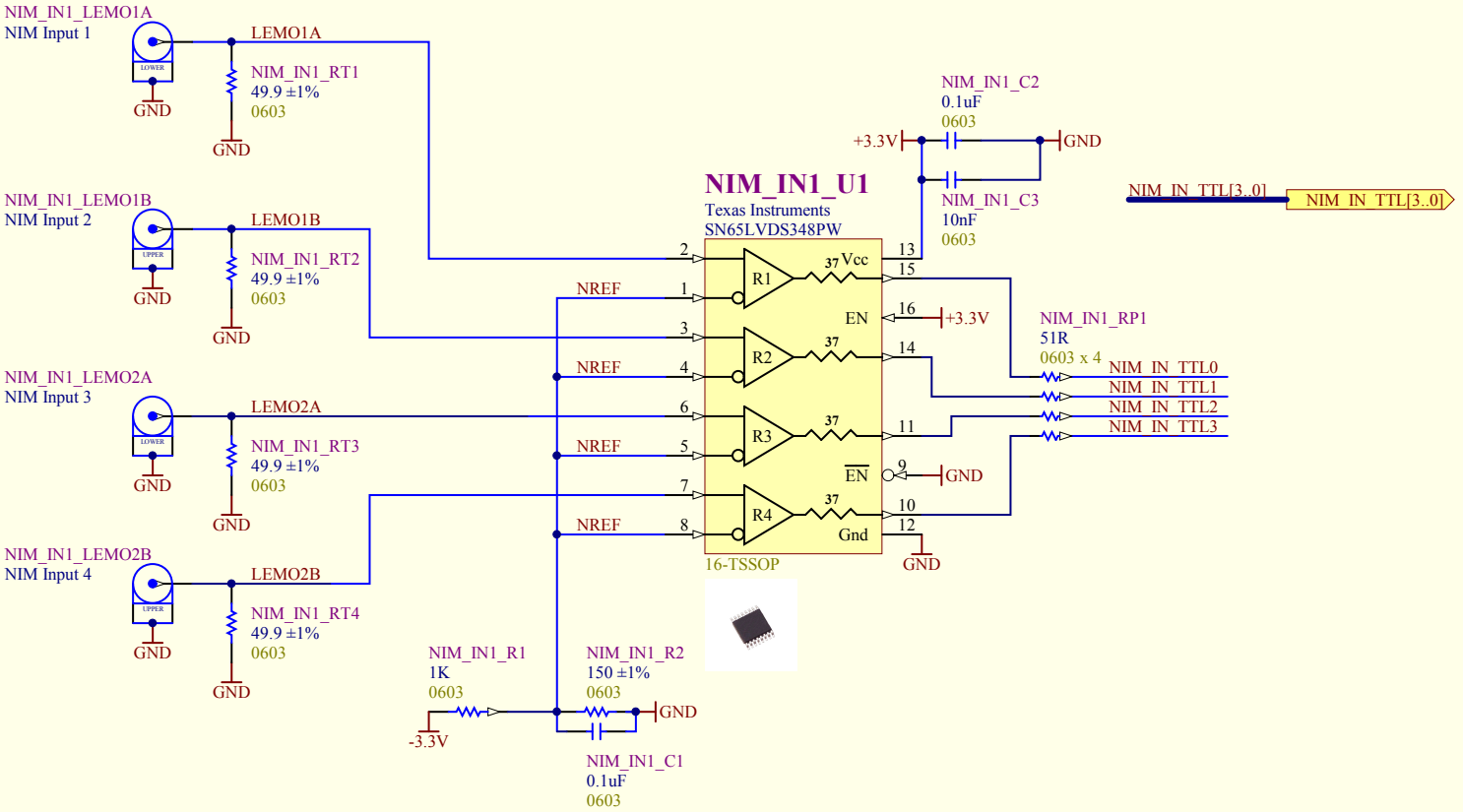


## VMEIO - NIMIO32 - NIM INPUT

| | | | |
|---|---|---|---|
| Revision 0 | Drawing #: 7 | | TRIUMF<br>4004 Wesbrook Mall<br>Vancouver, B.C.<br>Canada<br>V6T 2A3 |
| | Sheet #: 7 of 14 | Size: A | |
| | Drawn by: D.Bishop | Date: 15/10/2009 | |
| File: G:\AHW\VME-NIMIO32\ALTIUM\Altium\VME - NIMIO32 - NIMIN.SchDoc | | | 6:39:15 PM |

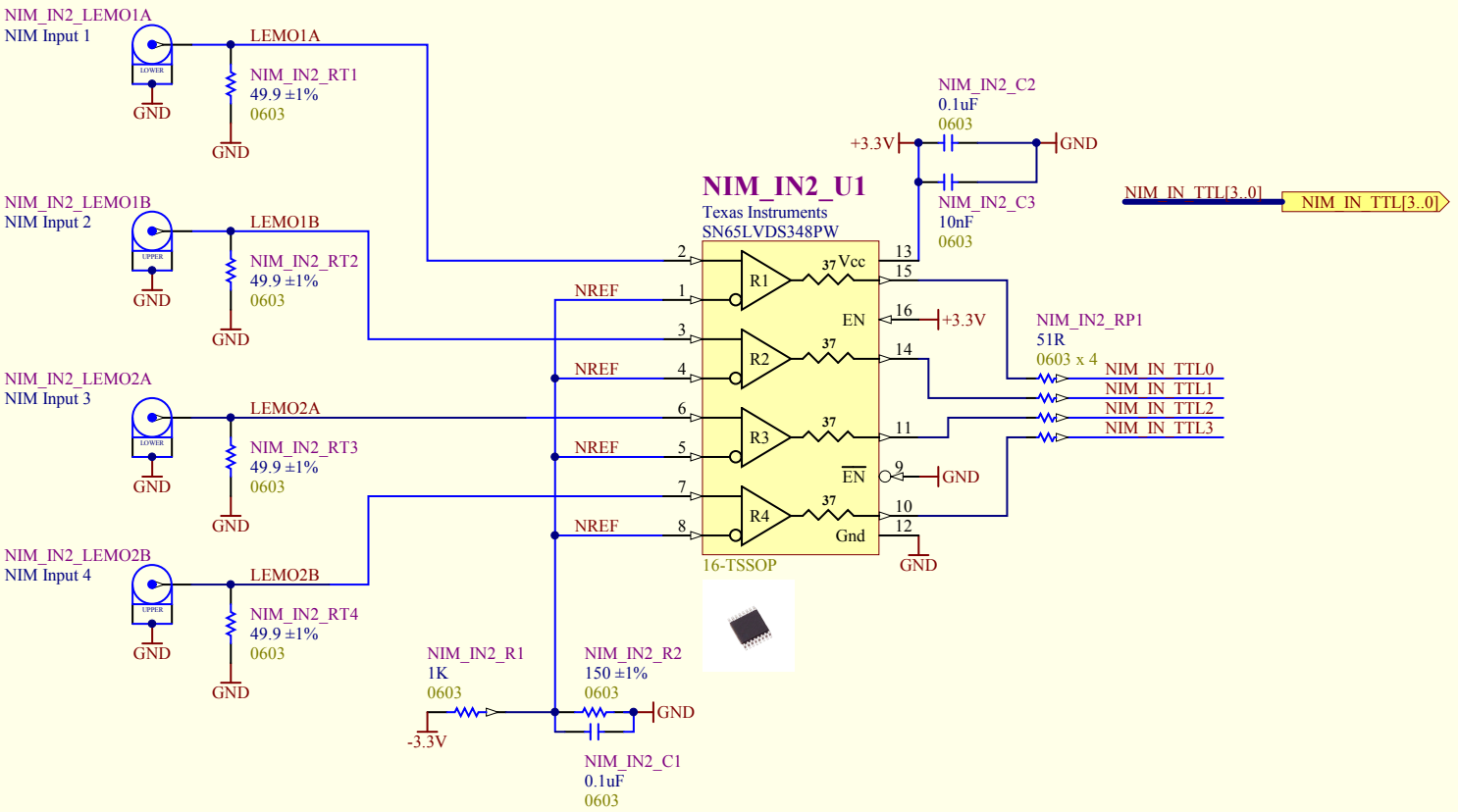


## VMEIO - NIMIO32 - NIM INPUT

| | | | |
|---|---|---|---|
| Revision 0 | Drawing #: 7 | | TRIUMF<br>4004 Wesbrook Mall<br>Vancouver, B.C.<br>Canada<br>V6T 2A3 |
| | Sheet #: 7 of 14 | Size: A | |
| | Drawn by: D.Bishop | Date: 15/10/2009 | |
| File: G:\AHW\VME-NIMIO32\ALTIUM\Altium\VME - NIMIO32 - NIMIN.SchDoc | | | 6:39:16 PM |

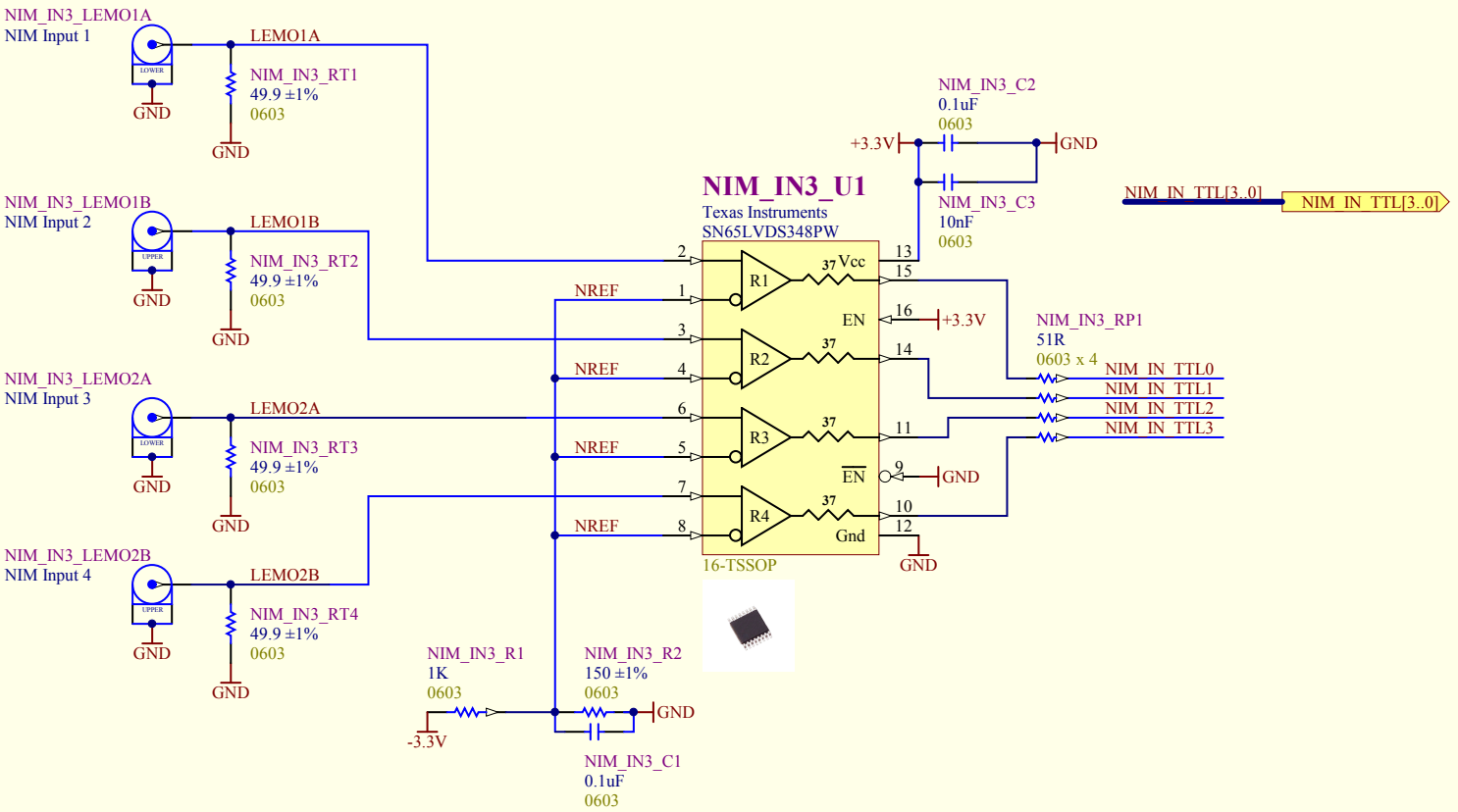


## VMEIO - NIMIO32 - NIM INPUT

| | | | |
|---|---|---|---|
| Revision 0 | Drawing #: 7 | | TRIUMF<br>4004 Wesbrook Mall<br>Vancouver, B.C.<br>Canada<br>V6T 2A3 |
| | Sheet #: 7 of 14 | Size: A | |
| | Drawn by: D.Bishop | Date: 15/10/2009 | |
| File: G:\AHW\VME-NIMIO32\ALTIUM\Altium\VME - NIMIO32 - NIMIN.SchDoc | | | 6:39:16 PM |

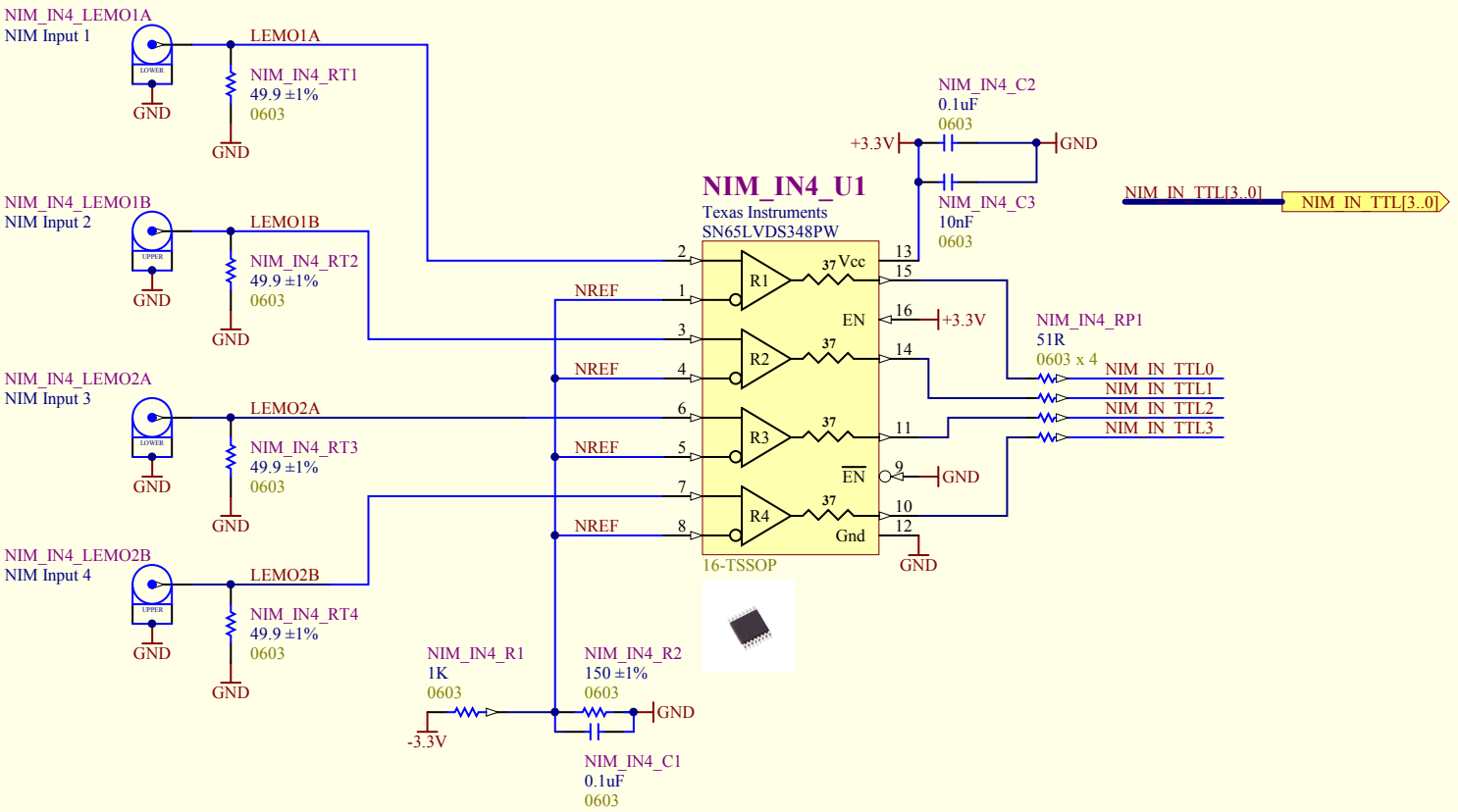


## VMEIO - NIMIO32 - NIM INPUT

| | | | |
|---|---|---|---|
| Revision 0 | Drawing #: 7 | | TRIUMF<br>4004 Wesbrook Mall<br>Vancouver, B.C.<br>Canada<br>V6T 2A3 |
| | Sheet #: 7 of 14 | Size: A | |
| | Drawn by: D.Bishop | Date: 15/10/2009 | |
| File: G:\AHW\VME-NIMIO32\ALTIUM\Altium\VME - NIMIO32 - NIMIN.SchDoc | | | 6:39:16 PM |

## U2A

SN65LVDM1677DGG

ATX/RXn

+3.3V (5)

NIMOUT0 (6) — LVDS0_P (64), LVDS0_N (63) → NIM_TX1: LVDS0_P, LVDS0_N, LVDS1_P, LVDS1_N

NIMOUT1 (7) — LVDS1_P (62), LVDS1_N (61)

NIMOUT2 (8) — LVDS2_P (60), LVDS2_N (59) → NIM_TX2: LVDS0_P, LVDS0_N, LVDS1_P, LVDS1_N

NIMOUT3 (9) — LVDS3_P (58), LVDS3_N (57)

Gnd Vcc: (1, 4, 15, 18, 29, 32) / (2, 3, 16, 17, 30, 31)

GND

64-TSSOP

+3.3V — C5 10nF, C6 0.1uF — GND

## U2B

SN65LVDM1677DGG

BTX/RXn

+3.3V (10)

NIMOUT4 (11) — LVDS4_P (56), LVDS4_N (55) → NIM_TX3: LVDS0_P, LVDS0_N, LVDS1_P, LVDS1_N

NIMOUT5 (12) — LVDS5_P (54), LVDS5_N (53)

NIMOUT6 (13) — LVDS6_P (52), LVDS6_N (51) → NIM_TX4: LVDS0_P, LVDS0_N, LVDS1_P, LVDS1_N

NIMOUT7 (14) — LVDS7_P (50), LVDS7_N (49)

Gnd Vcc: (1, 4, 15, 18, 29, 32) / (2, 3, 16, 17, 30, 31)

GND

64-TSSOP

+3.3V — C13 10nF, C14 0.1uF — GND

## U2C

SN65LVDM1677DGG

CTX/RXn

+3.3V (23)

NIMOUT8 (19) — LVDS8_P (48), LVDS8_N (47) → NIM_TX5: LVDS0_P, LVDS0_N, LVDS1_P, LVDS1_N

NIMOUT9 (20) — LVDS9_P (46), LVDS9_N (45)

NIMOUT10 (21) — LVDS10_P (44), LVDS10_N (43) → NIM_TX6: LVDS0_P, LVDS0_N, LVDS1_P, LVDS1_N

NIMOUT11 (22) — LVDS11_P (42), LVDS11_N (41)

Gnd Vcc: (1, 4, 15, 18, 29, 32) / (2, 3, 16, 17, 30, 31)

GND

SN65LVDM1677DGG

64-TSSOP

+3.3V — C15 10nF, C16 0.1uF — GND

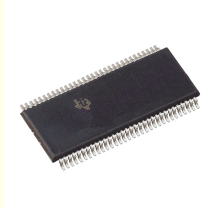

## U2D

SN65LVDM1677DGG

DTX/RXn

+3.3V (28)

NIMOUT12 (24) — LVDS12_P (40), LVDS12_N (39) → NIM_TX7: LVDS0_P, LVDS0_N, LVDS1_P, LVDS1_N

NIMOUT13 (25) — LVDS13_P (38), LVDS13_N (37)

NIMOUT14 (26) — LVDS14_P (36), LVDS14_N (35) → NIM_TX8: LVDS0_P, LVDS0_N, LVDS1_P, LVDS1_N

NIMOUT15 (27) — LVDS15_P (34), LVDS15_N (33)

Gnd Vcc: (1, 4, 15, 18, 29, 32) / (2, 3, 16, 17, 30, 31)

GND

64-TSSOP

+3.3V

NIMOUT[15..0] — NIMOUT[15..0]

# VMEIO - NIMIO32 - LVDS / ECL Input

| | | | |
|---|---|---|---|
| Revision 0 | Drawing #: 8 | | TRIUMF<br>4004 Wesbrook Mall<br>Vancouver, B.C.<br>Canada<br>V6T 2A3 |
| | Sheet #: 8 of 14 | Size: A | |
| | Drawn by: D.Bishop | Date: 15/10/2009 | |
| File: G:\AHW\VME-NIMIO32\ALTIUM\Altium\VME - NIMIO32 - NIMOUT.SchDoc | | | 6:39:16 PM |

PNP 5 GHz wideband transistor BFT92

**CHARACTERISTICS**

$T_j$ = 25 °C unless otherwise specified.

| SYMBOL | PARAMETER | CONDITIONS | MIN. | TYP. | MAX. | UNIT |
|---|---|---|---|---|---|---|
| $I_{CBO}$ | collector cut-off current | $I_E$ = 0; $V_{CB}$ = −10 V; | – | – | −50 | nA |
| $h_{FE}$ | DC current gain | $I_C$ = −14 mA; $V_{CE}$ = −10 V | 20 | 50 | – | |
| $f_T$ | transition frequency | $I_C$ = −14 mA; $V_{CE}$ = −10 V; f = 500 MHz | – | 5 | – | GHz |
| $C_c$ | collector capacitance | $I_E$ = $I_e$ = 0; $V_{CB}$ = −10 V; f = 1 MHz | – | 0.75 | – | pF |
| $C_e$ | emitter capacitance | $I_C$ = $I_c$ = 0; $V_{EB}$ = −0.5 V; f = 1 MHz | – | 0.8 | – | pF |
| $C_{re}$ | feedback capacitance | $I_C$ = −2 mA; $V_{CE}$ = −10 V; f = 1 MHz | – | 0.7 | – | pF |
| $G_{UM}$ | maximum unilateral power gain (note 1) | $I_C$ = −14 mA; $V_{CE}$ = −10 V; f = 500 MHz; $T_{amb}$ = 25 °C | – | 18 | – | dB |
| F | noise figure | $I_C$ = −5 mA; $V_{CE}$ = −10 V; f = 500 MHz; $T_{amb}$ = 25 °C | – | 2.5 | – | dB |
| $V_o$ | output voltage | note 2 | – | 150 | – | mV |

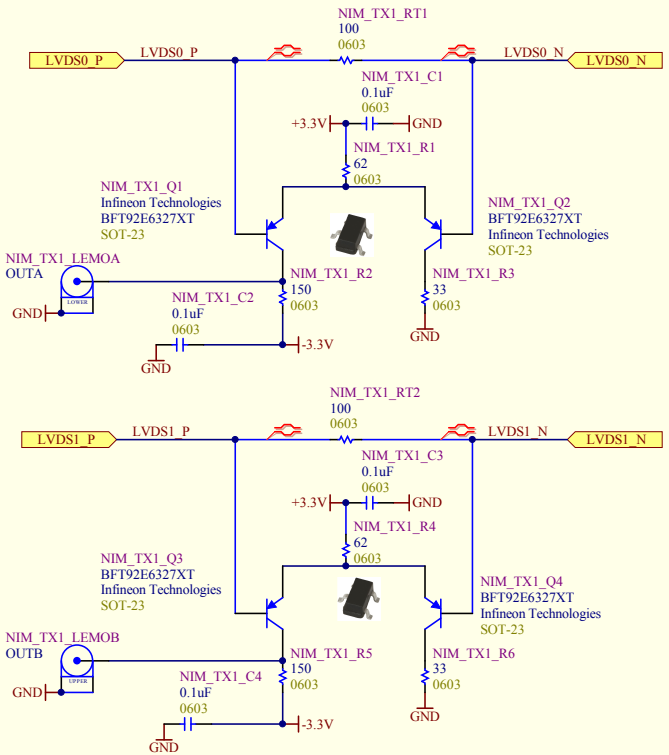


## Cyclone - LVDS

**Output Offset Voltage**

**Vos Max: 1.375**
**Vos Typ: 1.25**
**Vos Min: 1.125**

**Diff Output Voltage**

**Vod Min: 250mv**
**Vod Max: 600mv**

***VME - NIMIO32 - LVDS to NIM Converter***

| Revision | Drawing #: 9 | | TRIUMF |
|---|---|---|---|
| 0 | Sheet #: 9 of 14 | Size: A | 4004 Wesbrook Mall<br>Vancouver, B.C.<br>Canada<br>V6T 2A3 |
| | Drawn by: D.Bishop | Date: 15/10/2009 | |

File: G:\AHW\VME-NIMIO32\ALTIUM\Altium\VME-NIMIO32 - LVDS to NIM.SCHDOC 6:39:16 PM

PNP 5 GHz wideband transistor BFT92

**CHARACTERISTICS**

$T_j$ = 25 °C unless otherwise specified.

| SYMBOL | PARAMETER | CONDITIONS | MIN. | TYP. | MAX. | UNIT |
|---|---|---|---|---|---|---|
| $I_{CBO}$ | collector cut-off current | $I_E$ = 0; $V_{CB}$ = −10 V; | – | – | −50 | nA |
| $h_{FE}$ | DC current gain | $I_C$ = −14 mA; $V_{CE}$ = −10 V | 20 | 50 | – | |
| $f_T$ | transition frequency | $I_C$ = −14 mA; $V_{CE}$ = −10 V; f = 500 MHz | – | 5 | – | GHz |
| $C_c$ | collector capacitance | $I_E$ = $I_e$ = 0; $V_{CB}$ = −10 V; f = 1 MHz | – | 0.75 | – | pF |
| $C_e$ | emitter capacitance | $I_C$ = $I_c$ = 0; $V_{EB}$ = −0.5 V; f = 1 MHz | – | 0.8 | – | pF |
| $C_{re}$ | feedback capacitance | $I_C$ = −2 mA; $V_{CE}$ = −10 V; f = 1 MHz | – | 0.7 | – | pF |
| $G_{UM}$ | maximum unilateral power gain (note 1) | $I_C$ = −14 mA; $V_{CE}$ = −10 V; f = 500 MHz; $T_{amb}$ = 25 °C | – | 18 | – | dB |
| F | noise figure | $I_C$ = −5 mA; $V_{CE}$ = −10 V; f = 500 MHz; $T_{amb}$ = 25 °C | – | 2.5 | – | dB |
| $V_o$ | output voltage | note 2 | – | 150 | – | mV |

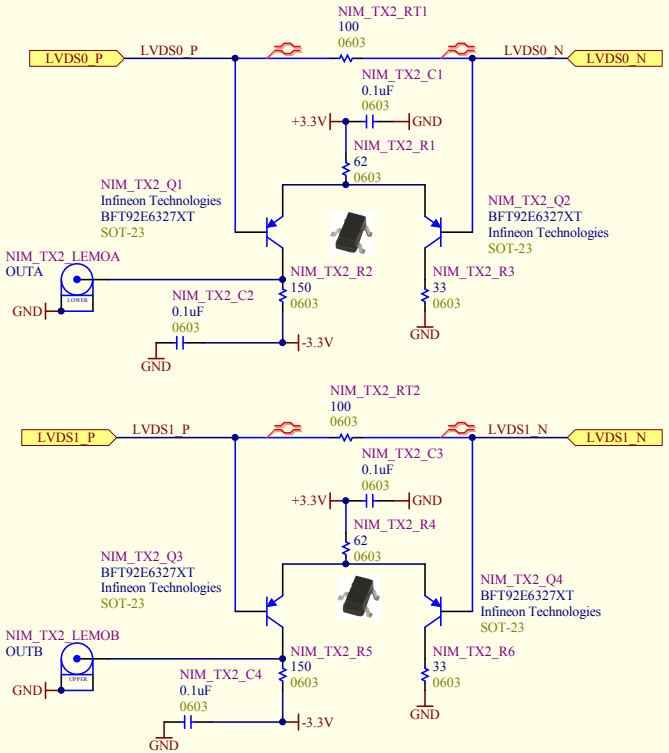


**Cyclone - LVDS**

**Output Offset Voltage**

**Vos Max: 1.375**
**Vos Typ: 1.25**
**Vos Min: 1.125**

**Diff Output Voltage**

**Vod Min: 250mv**
**Vod Max: 600mv**

***VME - NIMIO32 - LVDS to NIM Converter***

| Revision | Drawing #: 9 | | TRIUMF |
|---|---|---|---|
| 0 | Sheet #: 9 of 14 | Size: A | 4004 Wesbrook Mall<br>Vancouver, B.C.<br>Canada<br>V6T 2A3 |
| | Drawn by: D.Bishop | Date: 15/10/2009 | |

File: G:\AHW\VME-NIMIO32\ALTIUM\Altium\VME-NIMIO32 - LVDS to NIM.SCHDOC 6:39:16 PM

PNP 5 GHz wideband transistor BFT92

**CHARACTERISTICS**

$T_j$ = 25 °C unless otherwise specified.

| SYMBOL | PARAMETER | CONDITIONS | MIN. | TYP. | MAX. | UNIT |
|---|---|---|---|---|---|---|
| $I_{CBO}$ | collector cut-off current | $I_E$ = 0; $V_{CB}$ = −10 V; | – | – | −50 | nA |
| $h_{FE}$ | DC current gain | $I_C$ = −14 mA; $V_{CE}$ = −10 V | 20 | 50 | – | |
| $f_T$ | transition frequency | $I_C$ = −14 mA; $V_{CE}$ = −10 V; f = 500 MHz | – | 5 | – | GHz |
| $C_c$ | collector capacitance | $I_E$ = $I_e$ = 0; $V_{CB}$ = −10 V; f = 1 MHz | – | 0.75 | – | pF |
| $C_e$ | emitter capacitance | $I_C$ = $I_c$ = 0; $V_{EB}$ = −0.5 V; f = 1 MHz | – | 0.8 | – | pF |
| $C_{re}$ | feedback capacitance | $I_C$ = −2 mA; $V_{CE}$ = −10 V; f = 1 MHz | – | 0.7 | – | pF |
| $G_{UM}$ | maximum unilateral power gain (note 1) | $I_C$ = −14 mA; $V_{CE}$ = −10 V; f = 500 MHz; $T_{amb}$ = 25 °C | – | 18 | – | dB |
| F | noise figure | $I_C$ = −5 mA; $V_{CE}$ = −10 V; f = 500 MHz; $T_{amb}$ = 25 °C | – | 2.5 | – | dB |
| $V_o$ | output voltage | note 2 | – | 150 | – | mV |

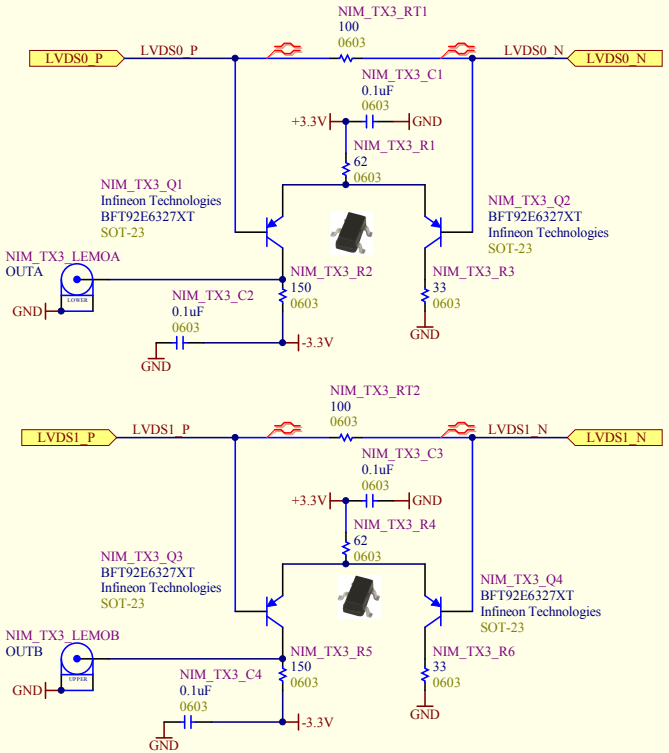


## Cyclone - LVDS

**Output Offset Voltage**

**Vos Max: 1.375**
**Vos Typ: 1.25**
**Vos Min: 1.125**

**Diff Output Voltage**

**Vod Min: 250mv**
**Vod Max: 600mv**

***VME - NIMIO32 - LVDS to NIM Converter***

| Revision | Drawing #: 9 | | TRIUMF |
|---|---|---|---|
| 0 | Sheet #: 9 of 14 | Size: A | 4004 Wesbrook Mall<br>Vancouver, B.C.<br>Canada<br>V6T 2A3 |
| | Drawn by: D.Bishop | Date: 15/10/2009 | |

File: G:\AHW\VME-NIMIO32\ALTIUM\Altium\VME-NIMIO32 - LVDS to NIM.SCHDOC 6:39:17 PM

PNP 5 GHz wideband transistor BFT92

**CHARACTERISTICS**

$T_j$ = 25 °C unless otherwise specified.

| SYMBOL | PARAMETER | CONDITIONS | MIN. | TYP. | MAX. | UNIT |
|---|---|---|---|---|---|---|
| $I_{CBO}$ | collector cut-off current | $I_E$ = 0; $V_{CB}$ = −10 V; | – | – | −50 | nA |
| $h_{FE}$ | DC current gain | $I_C$ = −14 mA; $V_{CE}$ = −10 V | 20 | 50 | – | |
| $f_T$ | transition frequency | $I_C$ = −14 mA; $V_{CE}$ = −10 V; f = 500 MHz | – | 5 | – | GHz |
| $C_c$ | collector capacitance | $I_E$ = $I_e$ = 0; $V_{CB}$ = −10 V; f = 1 MHz | – | 0.75 | – | pF |
| $C_e$ | emitter capacitance | $I_C$ = $I_c$ = 0; $V_{EB}$ = −0.5 V; f = 1 MHz | – | 0.8 | – | pF |
| $C_{re}$ | feedback capacitance | $I_C$ = −2 mA; $V_{CE}$ = −10 V; f = 1 MHz | – | 0.7 | – | pF |
| $G_{UM}$ | maximum unilateral power gain (note 1) | $I_C$ = −14 mA; $V_{CE}$ = −10 V; f = 500 MHz; $T_{amb}$ = 25 °C | – | 18 | – | dB |
| F | noise figure | $I_C$ = −5 mA; $V_{CE}$ = −10 V; f = 500 MHz; $T_{amb}$ = 25 °C | – | 2.5 | – | dB |
| $V_o$ | output voltage | note 2 | – | 150 | – | mV |

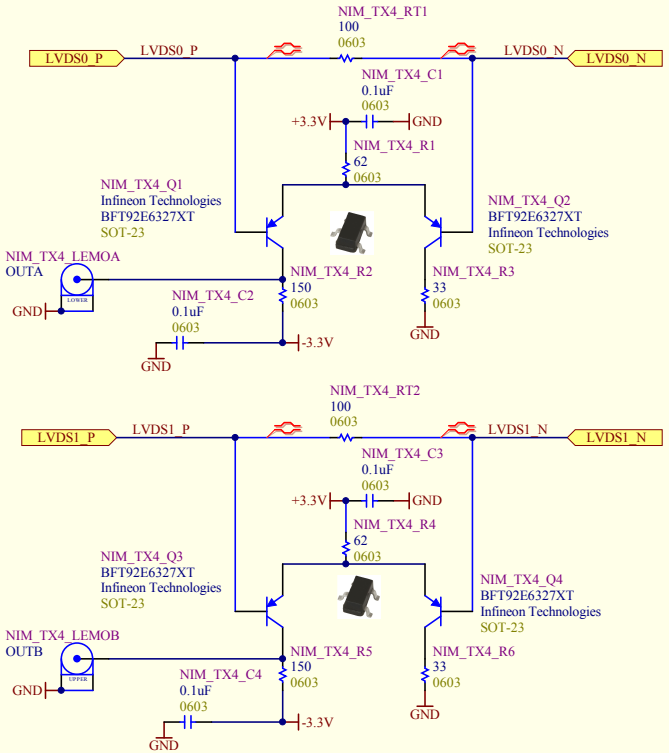


**Cyclone - LVDS**

**Output Offset Voltage**

**Vos Max: 1.375**
**Vos Typ: 1.25**
**Vos Min: 1.125**

**Diff Output Voltage**

**Vod Min: 250mv**
**Vod Max: 600mv**

***VME - NIMIO32 - LVDS to NIM Converter***

| Revision | Drawing #: 9 | | TRIUMF |
|---|---|---|---|
| 0 | Sheet #: 9 of 14 | Size: A | 4004 Wesbrook Mall<br>Vancouver, B.C.<br>Canada<br>V6T 2A3 |
| | Drawn by: D.Bishop | Date: 15/10/2009 | |

File: G:\AHW\VME-NIMIO32\ALTIUM\Altium\VME-NIMIO32 - LVDS to NIM.SCHDOC 6:39:17 PM

PNP 5 GHz wideband transistor BFT92

**CHARACTERISTICS**

$T_j$ = 25 °C unless otherwise specified.

| SYMBOL | PARAMETER | CONDITIONS | MIN. | TYP. | MAX. | UNIT |
|---|---|---|---|---|---|---|
| $I_{CBO}$ | collector cut-off current | $I_E$ = 0; $V_{CB}$ = −10 V; | – | – | −50 | nA |
| $h_{FE}$ | DC current gain | $I_C$ = −14 mA; $V_{CE}$ = −10 V | 20 | 50 | – | |
| $f_T$ | transition frequency | $I_C$ = −14 mA; $V_{CE}$ = −10 V; f = 500 MHz | – | 5 | – | GHz |
| $C_c$ | collector capacitance | $I_E$ = $I_e$ = 0; $V_{CB}$ = −10 V; f = 1 MHz | – | 0.75 | – | pF |
| $C_e$ | emitter capacitance | $I_C$ = $I_c$ = 0; $V_{EB}$ = −0.5 V; f = 1 MHz | – | 0.8 | – | pF |
| $C_{re}$ | feedback capacitance | $I_C$ = −2 mA; $V_{CE}$ = −10 V; f = 1 MHz | – | 0.7 | – | pF |
| $G_{UM}$ | maximum unilateral power gain (note 1) | $I_C$ = −14 mA; $V_{CE}$ = −10 V; f = 500 MHz; $T_{amb}$ = 25 °C | – | 18 | – | dB |
| F | noise figure | $I_C$ = −5 mA; $V_{CE}$ = −10 V; f = 500 MHz; $T_{amb}$ = 25 °C | – | 2.5 | – | dB |
| $V_o$ | output voltage | note 2 | – | 150 | – | mV |

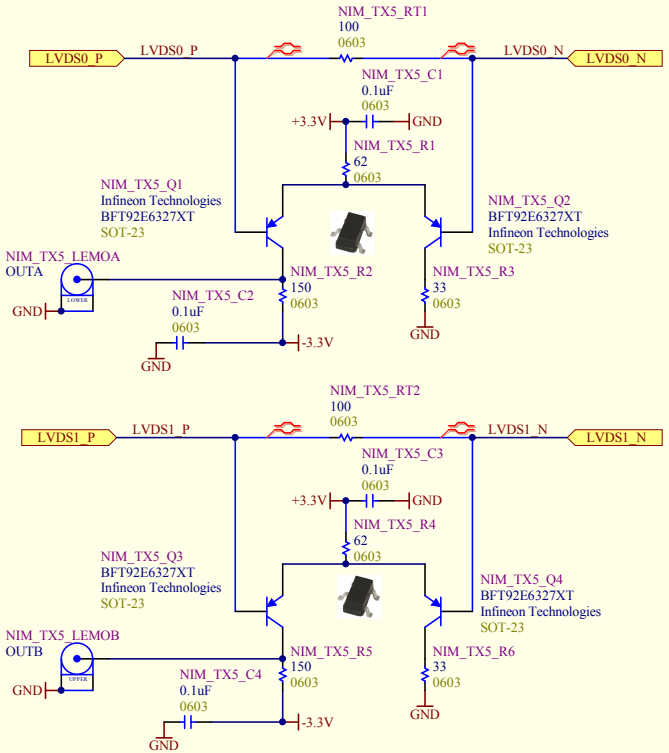


**Cyclone - LVDS**

**Output Offset Voltage**

**Vos Max: 1.375**
**Vos Typ: 1.25**
**Vos Min: 1.125**

**Diff Output Voltage**

**Vod Min: 250mv**
**Vod Max: 600mv**

***VME - NIMIO32 - LVDS to NIM Converter***

| Revision | Drawing #: 9 | | TRIUMF |
|---|---|---|---|
| 0 | Sheet #: 9 of 14 | Size: A | 4004 Wesbrook Mall<br>Vancouver, B.C.<br>Canada<br>V6T 2A3 |
| | Drawn by: D.Bishop | Date: 15/10/2009 | |

File: G:\AHW\VME-NIMIO32\ALTIUM\Altium\VME-NIMIO32 - LVDS to NIM.SCHDOC 6:39:17 PM

PNP 5 GHz wideband transistor BFT92

**CHARACTERISTICS**

$T_j$ = 25 °C unless otherwise specified.

| SYMBOL | PARAMETER | CONDITIONS | MIN. | TYP. | MAX. | UNIT |
|---|---|---|---|---|---|---|
| $I_{CBO}$ | collector cut-off current | $I_E$ = 0; $V_{CB}$ = −10 V; | – | – | −50 | nA |
| $h_{FE}$ | DC current gain | $I_C$ = −14 mA; $V_{CE}$ = −10 V | 20 | 50 | – | |
| $f_T$ | transition frequency | $I_C$ = −14 mA; $V_{CE}$ = −10 V; f = 500 MHz | – | 5 | – | GHz |
| $C_c$ | collector capacitance | $I_E$ = $I_e$ = 0; $V_{CB}$ = −10 V; f = 1 MHz | – | 0.75 | – | pF |
| $C_e$ | emitter capacitance | $I_C$ = $I_c$ = 0; $V_{EB}$ = −0.5 V; f = 1 MHz | – | 0.8 | – | pF |
| $C_{re}$ | feedback capacitance | $I_C$ = −2 mA; $V_{CE}$ = −10 V; f = 1 MHz | – | 0.7 | – | pF |
| $G_{UM}$ | maximum unilateral power gain (note 1) | $I_C$ = −14 mA; $V_{CE}$ = −10 V; f = 500 MHz; $T_{amb}$ = 25 °C | – | 18 | – | dB |
| F | noise figure | $I_C$ = −5 mA; $V_{CE}$ = −10 V; f = 500 MHz; $T_{amb}$ = 25 °C | – | 2.5 | – | dB |
| $V_o$ | output voltage | note 2 | – | 150 | – | mV |

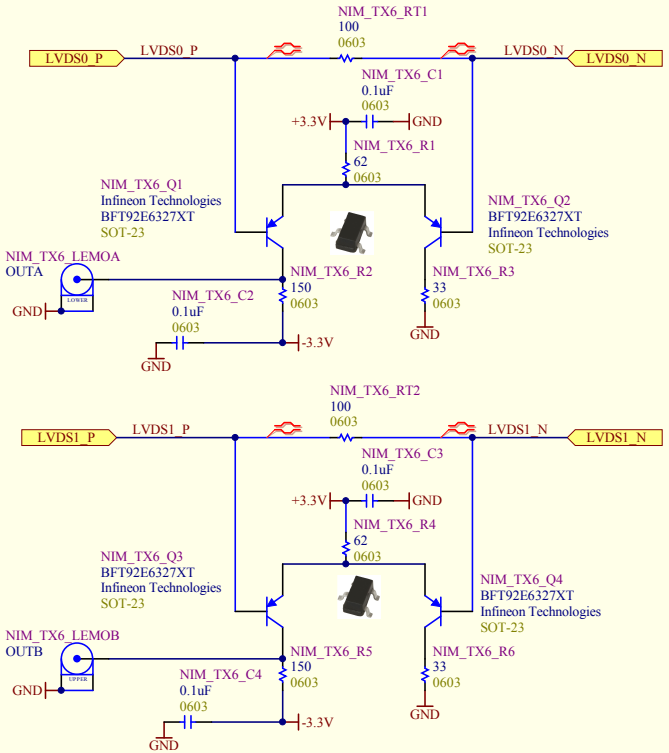


**Cyclone - LVDS**

**Output Offset Voltage**

**Vos Max: 1.375**
**Vos Typ: 1.25**
**Vos Min: 1.125**

**Diff Output Voltage**

**Vod Min: 250mv**
**Vod Max: 600mv**

***VME - NIMIO32 - LVDS to NIM Converter***

| Revision | Drawing #: 9 | | TRIUMF |
|---|---|---|---|
| 0 | Sheet #: 9 of 14 | Size: A | 4004 Wesbrook Mall<br>Vancouver, B.C.<br>Canada<br>V6T 2A3 |
| | Drawn by: D.Bishop | Date: 15/10/2009 | |

File: G:\AHW\VME-NIMIO32\ALTIUM\Altium\VME-NIMIO32 - LVDS to NIM.SCHDOC 6:39:17 PM

PNP 5 GHz wideband transistor BFT92

**CHARACTERISTICS**

$T_j$ = 25 °C unless otherwise specified.

| SYMBOL | PARAMETER | CONDITIONS | MIN. | TYP. | MAX. | UNIT |
|---|---|---|---|---|---|---|
| $I_{CBO}$ | collector cut-off current | $I_E$ = 0; $V_{CB}$ = −10 V; | – | – | −50 | nA |
| $h_{FE}$ | DC current gain | $I_C$ = −14 mA; $V_{CE}$ = −10 V | 20 | 50 | – | |
| $f_T$ | transition frequency | $I_C$ = −14 mA; $V_{CE}$ = −10 V; f = 500 MHz | – | 5 | – | GHz |
| $C_c$ | collector capacitance | $I_E$ = $I_e$ = 0; $V_{CB}$ = −10 V; f = 1 MHz | – | 0.75 | – | pF |
| $C_e$ | emitter capacitance | $I_C$ = $I_c$ = 0; $V_{EB}$ = −0.5 V; f = 1 MHz | – | 0.8 | – | pF |
| $C_{re}$ | feedback capacitance | $I_C$ = −2 mA; $V_{CE}$ = −10 V; f = 1 MHz | – | 0.7 | – | pF |
| $G_{UM}$ | maximum unilateral power gain (note 1) | $I_C$ = −14 mA; $V_{CE}$ = −10 V; f = 500 MHz; $T_{amb}$ = 25 °C | – | 18 | – | dB |
| F | noise figure | $I_C$ = −5 mA; $V_{CE}$ = −10 V; f = 500 MHz; $T_{amb}$ = 25 °C | – | 2.5 | – | dB |
| $V_o$ | output voltage | note 2 | – | 150 | – | mV |

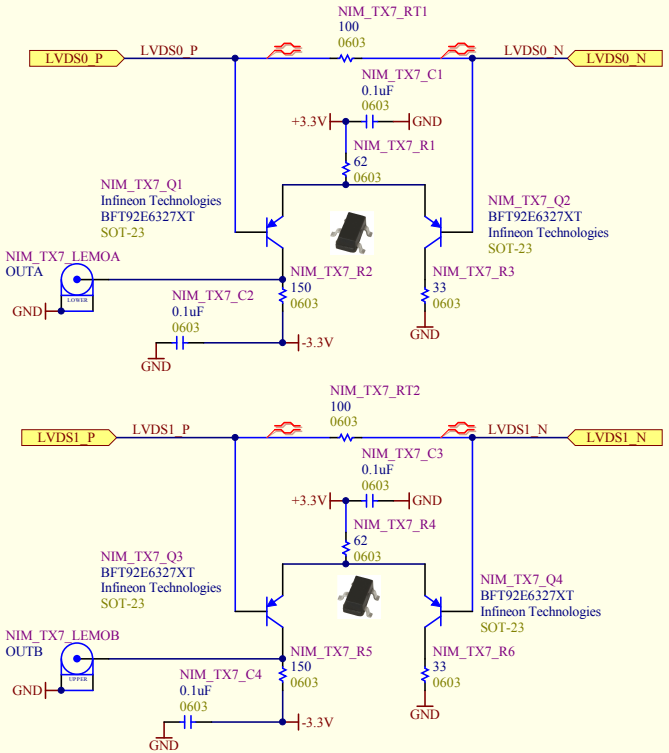


**Cyclone - LVDS**

**Output Offset Voltage**

**Vos Max: 1.375**
**Vos Typ: 1.25**
**Vos Min: 1.125**

**Diff Output Voltage**

**Vod Min: 250mv**
**Vod Max: 600mv**

***VME - NIMIO32 - LVDS to NIM Converter***

| Revision | Drawing #: 9 | | TRIUMF |
|---|---|---|---|
| 0 | Sheet #: 9 of 14 | Size: A | 4004 Wesbrook Mall<br>Vancouver, B.C.<br>Canada<br>V6T 2A3 |
| | Drawn by: D.Bishop | Date: 15/10/2009 | |

File: G:\AHW\VME-NIMIO32\ALTIUM\Altium\VME-NIMIO32 - LVDS to NIM.SCHDOC 6:39:18 PM

PNP 5 GHz wideband transistor BFT92

**CHARACTERISTICS**

$T_j$ = 25 °C unless otherwise specified.

| SYMBOL | PARAMETER | CONDITIONS | MIN. | TYP. | MAX. | UNIT |
|---|---|---|---|---|---|---|
| $I_{CBO}$ | collector cut-off current | $I_E$ = 0; $V_{CB}$ = −10 V; | – | – | −50 | nA |
| $h_{FE}$ | DC current gain | $I_C$ = −14 mA; $V_{CE}$ = −10 V | 20 | 50 | – | |
| $f_T$ | transition frequency | $I_C$ = −14 mA; $V_{CE}$ = −10 V; f = 500 MHz | – | 5 | – | GHz |
| $C_c$ | collector capacitance | $I_E$ = $I_e$ = 0; $V_{CB}$ = −10 V; f = 1 MHz | – | 0.75 | – | pF |
| $C_e$ | emitter capacitance | $I_C$ = $I_c$ = 0; $V_{EB}$ = −0.5 V; f = 1 MHz | – | 0.8 | – | pF |
| $C_{re}$ | feedback capacitance | $I_C$ = −2 mA; $V_{CE}$ = −10 V; f = 1 MHz | – | 0.7 | – | pF |
| $G_{UM}$ | maximum unilateral power gain (note 1) | $I_C$ = −14 mA; $V_{CE}$ = −10 V; f = 500 MHz; $T_{amb}$ = 25 °C | – | 18 | – | dB |
| F | noise figure | $I_C$ = −5 mA; $V_{CE}$ = −10 V; f = 500 MHz; $T_{amb}$ = 25 °C | – | 2.5 | – | dB |
| $V_o$ | output voltage | note 2 | – | 150 | – | mV |

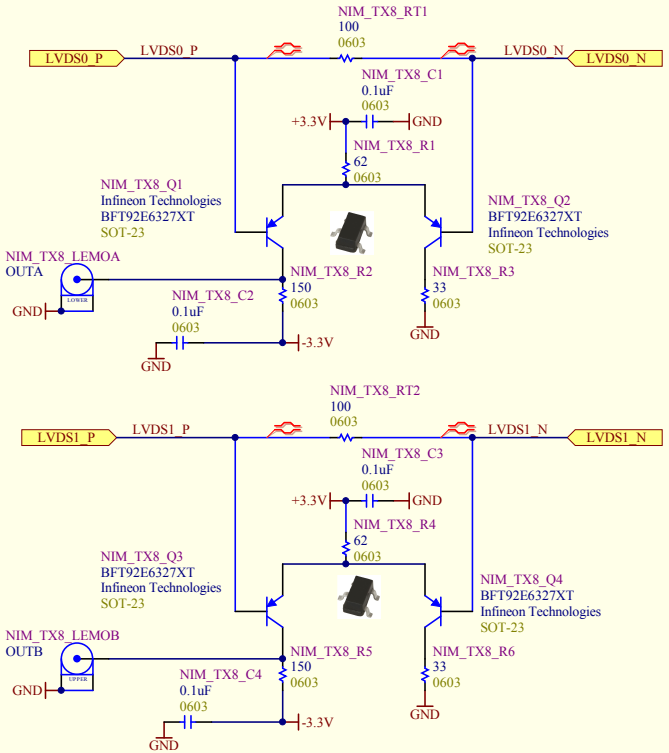


## Cyclone - LVDS

**Output Offset Voltage**

**Vos Max: 1.375**
**Vos Typ: 1.25**
**Vos Min: 1.125**

**Diff Output Voltage**

**Vod Min: 250mv**
**Vod Max: 600mv**

***VME - NIMIO32 - LVDS to NIM Converter***

| Revision | Drawing #: 9 | | TRIUMF |
|---|---|---|---|
| 0 | Sheet #: 9 of 14 | Size: A | 4004 Wesbrook Mall<br>Vancouver, B.C.<br>Canada<br>V6T 2A3 |
| | Drawn by: D.Bishop | Date: 15/10/2009 | |

File: G:\AHW\VME-NIMIO32\ALTIUM\Altium\VME-NIMIO32 - LVDS to NIM.SCHDOC 6:39:18 PM

## U18A

SN65LVDM1677DGG

ATX/RXn

+3.3V

SER_TX_CLK

SER_TX0

SER_TX1

SER_TX2

TXCLKIN+_P

TXCLKIN+_N

TXIN0+_P

TXIN0+_N

TXIN1+_P

TXIN1+_N

TXIN2+_P

TXIN2+_N

Gnd Vcc

GND

64-TSSOP

+3.3V

C70 10nF

C71 0.1uF

GND

## U18B

SN65LVDM1677DGG

BTX/RXn

+3.3V

SER_TX3

SER_TX4

TXIN3+_P

TXIN3+_N

TXIN4+_P

TXIN4+_N

Gnd Vcc

GND

64-TSSOP

+3.3V

C72 10nF

C73 0.1uF

GND

## U18C

GND

CTX/RXn

SER_RX_CLK

SER_RX0

SER_RX1

SER_RX2

RXCLKOUT+_P

RXCLKOUT+_N

RXOUT0+_P

RXOUT0+_N

RXOUT1+_P

RXOUT1+_N

RXOUT2+_P

RXOUT2+_N

Gnd Vcc

GND

SN65LVDM1677DGG

64-TSSOP

+3.3V

C74 10nF

C75 0.1uF

GND

## U18D

SN65LVDM1677DGG

GND

DTX/RXn

SER_RX3

SER_RX4

RXOUT3+_P

RXOUT3+_N

RXOUT4+_P

RXOUT4+_N

Gnd Vcc

GND

64-TSSOP

+3.3V

SER_TX[4..0]

SER_RX[4..0]

SER_TX[4..0]

SER_RX[4..0]

## SER_TxRx

VME - NIMIO32 - Serial TxRx.SchDoc

TXCLKIN+_P

TXCLKIN+_N

TXIN0+_P

TXIN0+_N

TXIN1+_P

TXIN1+_N

TXIN2+_P

TXIN2+_N

TXIN3+_P

TXIN3+_N

TXIN4+_P

TXIN4+_N

TX_LOCKn

SMB_SCK

SMB_SDA

RX_SMB_CS

TX_SMB_CS

SER_RESETn

RXCLKOUT+_P

RXCLKOUT+_N

RXOUT0+_P

RXOUT0+_N

RXOUT1+_P

RXOUT1+_N

RXOUT2+_P

RXOUT2+_N

RXOUT3+_P

RXOUT3+_N

RXOUT4+_P

RXOUT4+_N

RX_LOCKn

***VMEIO - NIMIO32 - High Speed Serial***

| | | | |
|---|---|---|---|
| Revision **0** | Drawing #: 10 | | *TRIUMF* 4004 Wesbrook Mall Vancouver, B.C. Canada V6T 2A3 |
| | Sheet #: 10 of 14 | Size: A | |
| | Drawn by: D.Bishop | Date: 15/10/2009 | |
| File: G:\AHW\VME-NIMIO32\ALTIUM\Altium\VME - NIMIO32 - High Speed Serial.SchDoc | | | 6:39:18 PM |

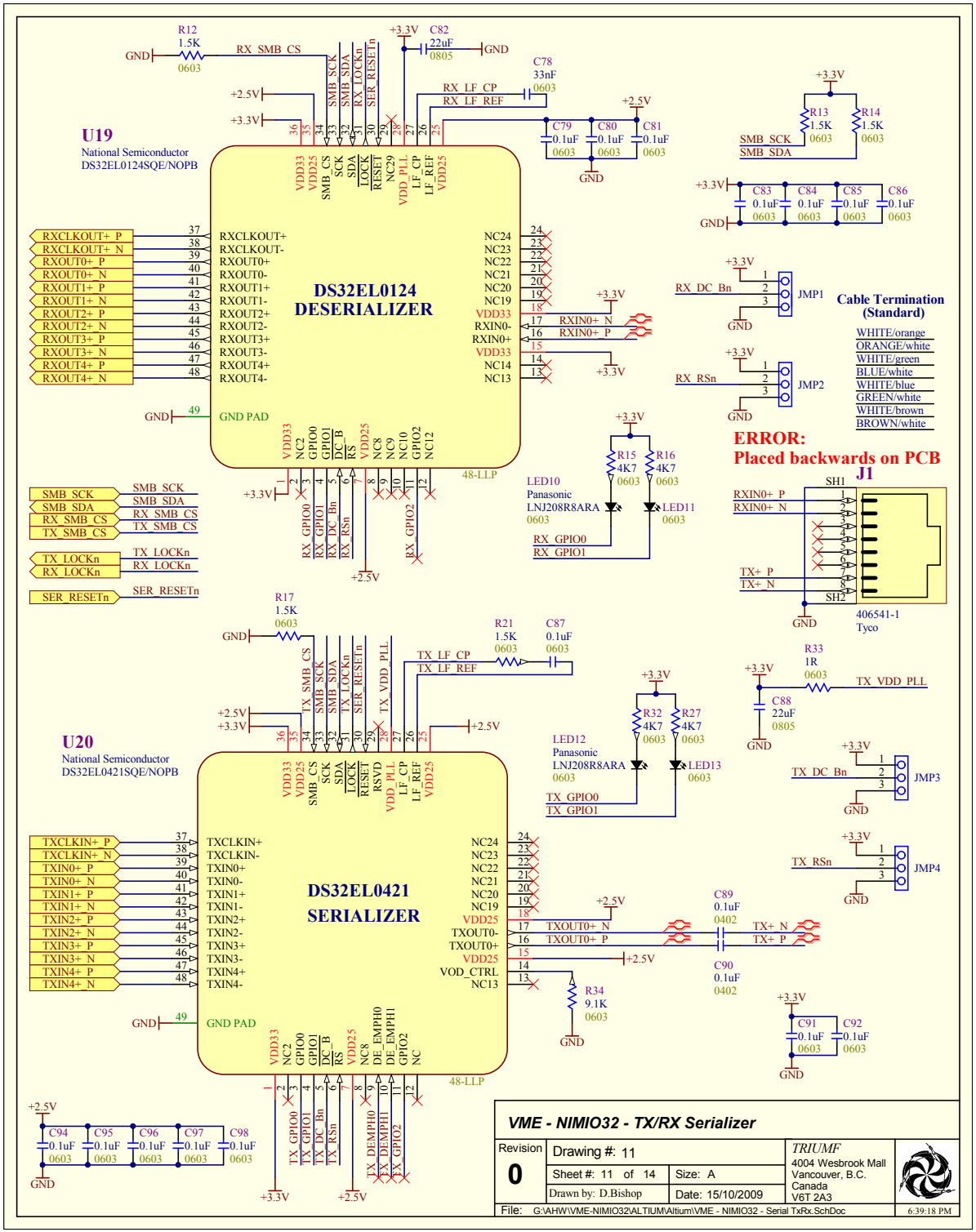
U19
National Semiconductor
DS32EL0124SQE/NOPB
DS32EL0124
DESERIALIZER
RXCLKOUT+
RXCLKOUT-
RXOUT0+
RXOUT0-
RXOUT1+
RXOUT1-
RXOUT2+
RXOUT2-
RXOUT3+
RXOUT3-
RXOUT4+
RXOUT4-
RXIN0+
RXIN0-
GND PAD
48-LLP
U20
National Semiconductor
DS32EL0421SQE/NOPB
DS32EL0421
SERIALIZER
TXCLKIN+
TXCLKIN-
TXIN0+
TXIN0-
TXIN1+
TXIN1-
TXIN2+
TXIN2-
TXIN3+
TXIN3-
TXIN4+
TXIN4-
TXOUT0+
TXOUT0-
VOD_CTRL
Cable Termination
(Standard)
WHITE/orange
ORANGE/white
WHITE/green
BLUE/white
WHITE/blue
GREEN/white
WHITE/brown
BROWN/white
ERROR:
Placed backwards on PCB
J1
406541-1
Tyco
LED10
Panasonic
LNJ208R8ARA
LED11
LED12
LED13
VME - NIMIO32 - TX/RX Serializer
Revision
0
Drawing #: 11
Sheet #: 11 of 14
Size: A
Drawn by: D.Bishop
Date: 15/10/2009
TRIUMF
4004 Wesbrook Mall
Vancouver, B.C.
Canada
V6T 2A3
File: G:\AHW\VME-NIMIO32\ALTIUM\Altium\VME - NIMIO32 - Serial TxRx.SchDoc
6:39:18 PM

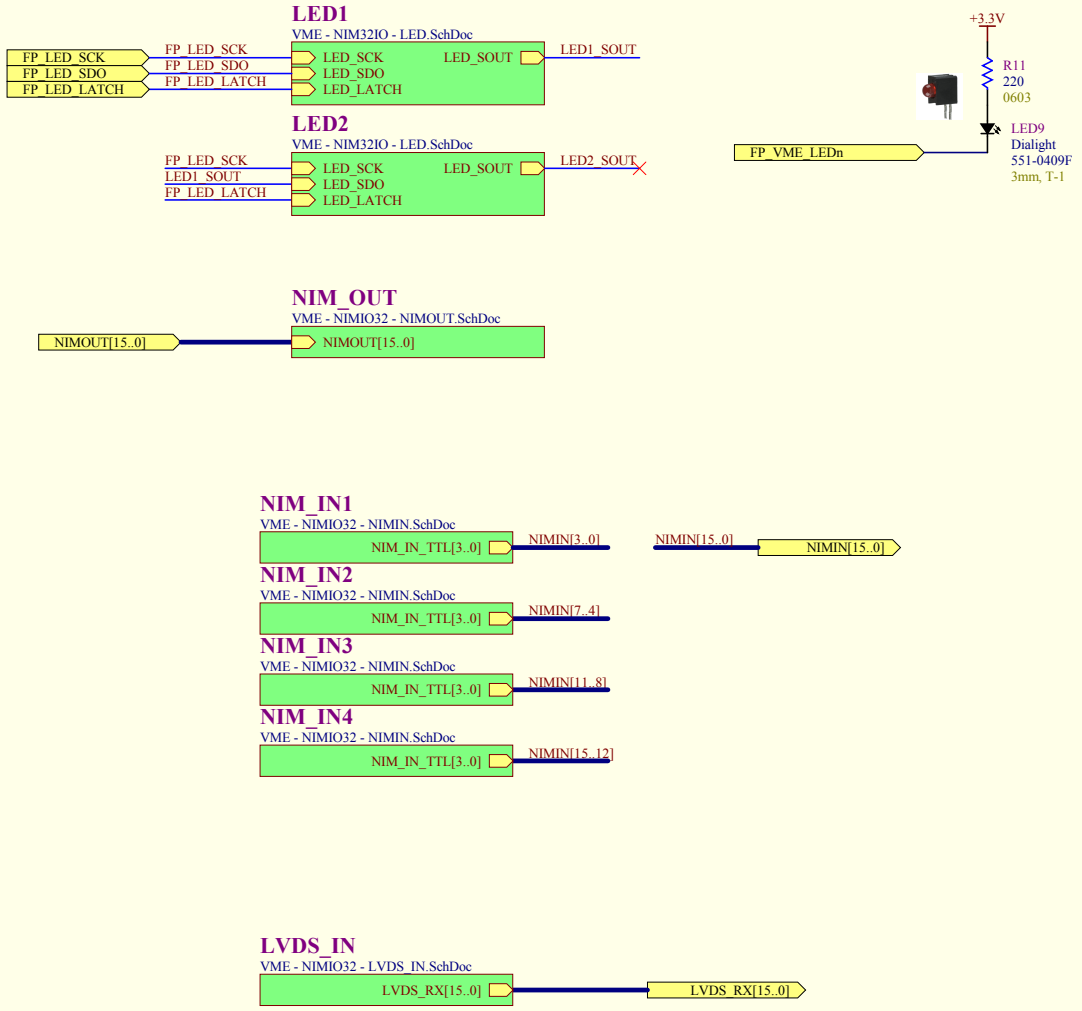


***VME - NIMIO32 - Front Panel***

| | | | |
|---|---|---|---|
| Revision **0** | Drawing #: 12 | | *TRIUMF* 4004 Wesbrook Mall Vancouver, B.C. Canada V6T 2A3 |
| | Sheet #: 12 of 14 | Size: A | |
| | Drawn by: D.Bishop | Date: 15/10/2009 | |
| File: G:\AHW\VME-NIMIO32\ALTIUM\Altium\VME-NIMIO32 - Front Panel.SCHDOC | | | 6:39:18 PM |

Alternate Part Numbers:
ST Microelectronics - STP16CP05TTR
Catalyst Semiconductor - CAT4016Y-T2
Allegro - A6282ELP-T

## LED1_U1

Texas Instruments
TLC5928PW

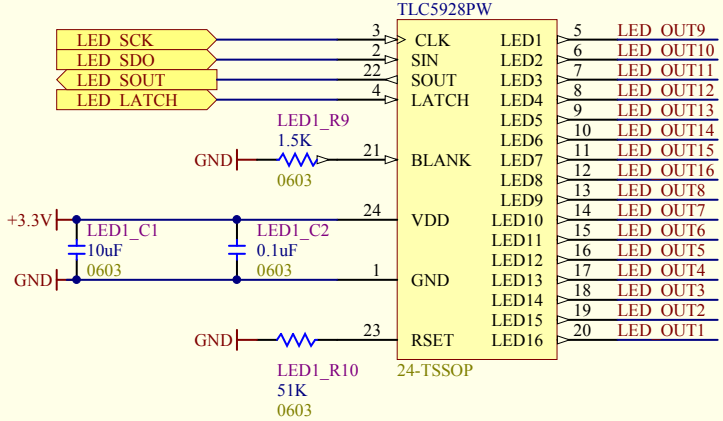


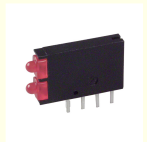

**OUTPUTS**
**Red LEDs: 571-0111F**

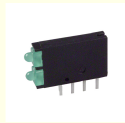

**INPUTS**
**Green LEDs: 571-0122F**

## LED1_LED4

Dialight
571-0111F

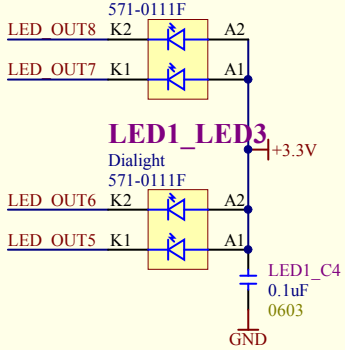


## LED1_LED3

Dialight
571-0111F




## LED1_LED8

Dialight
571-0111F

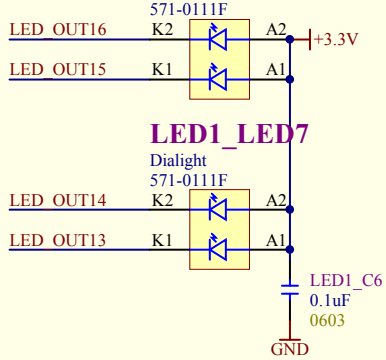


## LED1_LED7

Dialight
571-0111F




## LED1_LED2

Dialight
571-0111F

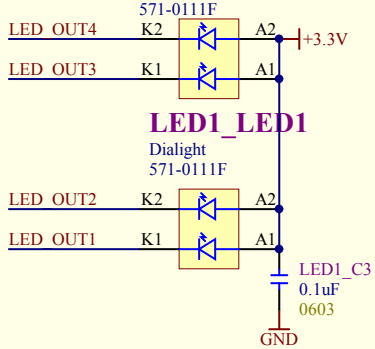


## LED1_LED1

Dialight
571-0111F




## LED1_LED6

Dialight
571-0111F

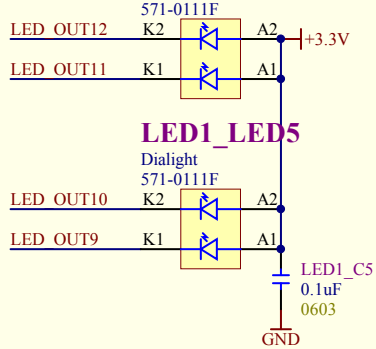


## LED1_LED5

Dialight
571-0111F




***VME - NIMIO32 - Front Panel LEDs and driver***

| | | | |
|---|---|---|---|
| Revision **0** | Drawing #: 13 | | *TRIUMF* 4004 Wesbrook Mall Vancouver, B.C. Canada V6T 2A3 |
| | Sheet #: 13 of 14 | Size: A | |
| | Drawn by: D.Bishop | Date: 15/10/2009 | |
| File: G:\AHW\VME-NIMIO32\ALTIUM\Altium\VME - NIM32IO - LED.SchDoc | | | 6:39:18 PM |

Alternate Part Numbers:
ST Microelectronics - STP16CP05TTR
Catalyst Semiconductor - CAT4016Y-T2
Allegro - A6282ELP-T

## LED2_U1

Texas Instruments
TLC5928PW

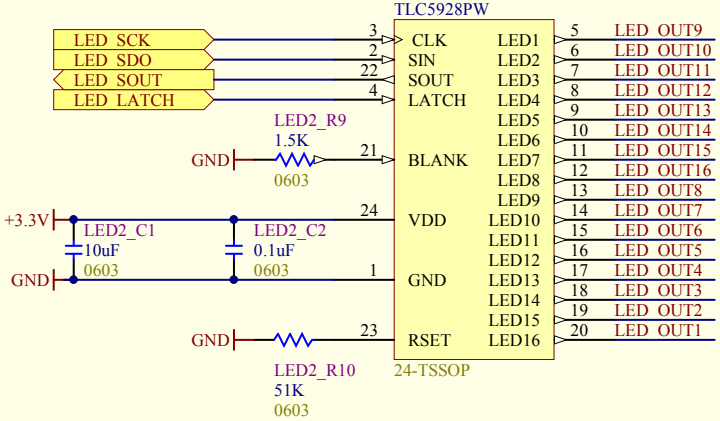


## LED2_LED4

Dialight
571-0111F

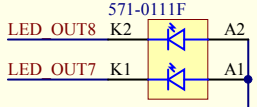


## LED2_LED3

Dialight
571-0111F

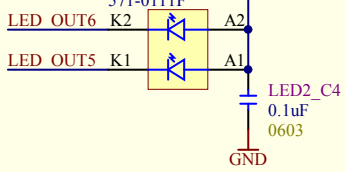


## LED2_LED8

Dialight
571-0111F

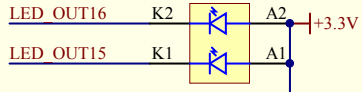


## LED2_LED7

Dialight
571-0111F

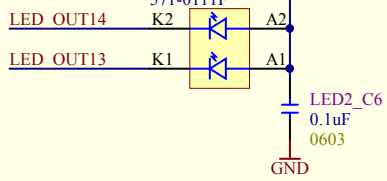


## LED2_LED2

Dialight
571-0111F

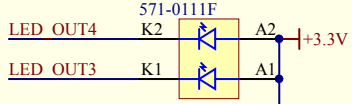


## LED2_LED1

Dialight
571-0111F

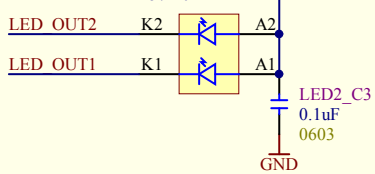


## LED2_LED6

Dialight
571-0111F

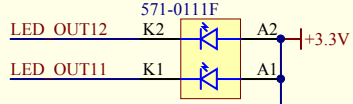


## LED2_LED5

Dialight
571-0111F

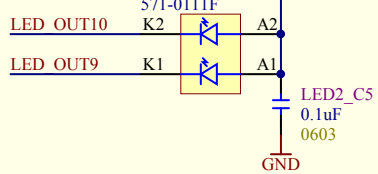


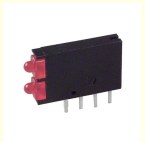

**OUTPUTS**
**Red LEDs: 571-0111F**

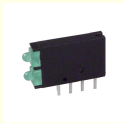

**INPUTS**
**Green LEDs: 571-0122F**

***VME - NIMIO32 - Front Panel LEDs and driver***

| | | | |
|---|---|---|---|
| Revision **0** | Drawing #: 13 | | *TRIUMF* 4004 Wesbrook Mall Vancouver, B.C. Canada V6T 2A3 |
| | Sheet #: 13 of 14 | Size: A | |
| | Drawn by: D.Bishop | Date: 15/10/2009 | |
| File: G:\AHW\VME-NIMIO32\ALTIUM\Altium\VME - NIM32IO - LED.SchDoc | | | 6:39:19 PM |

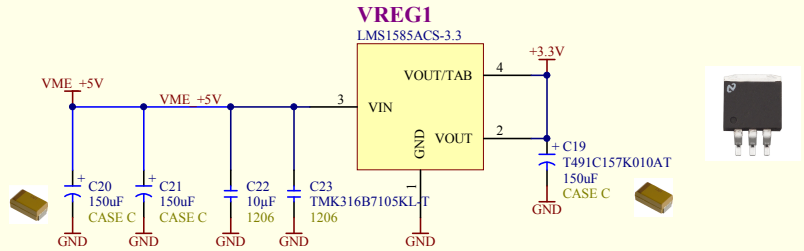


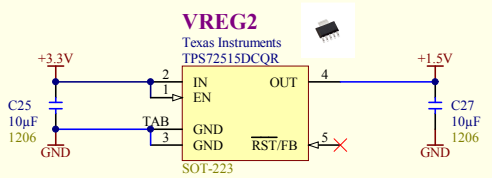


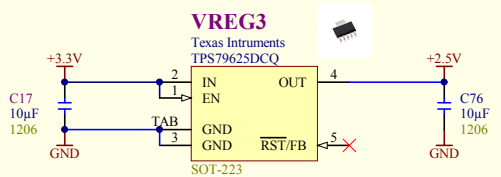


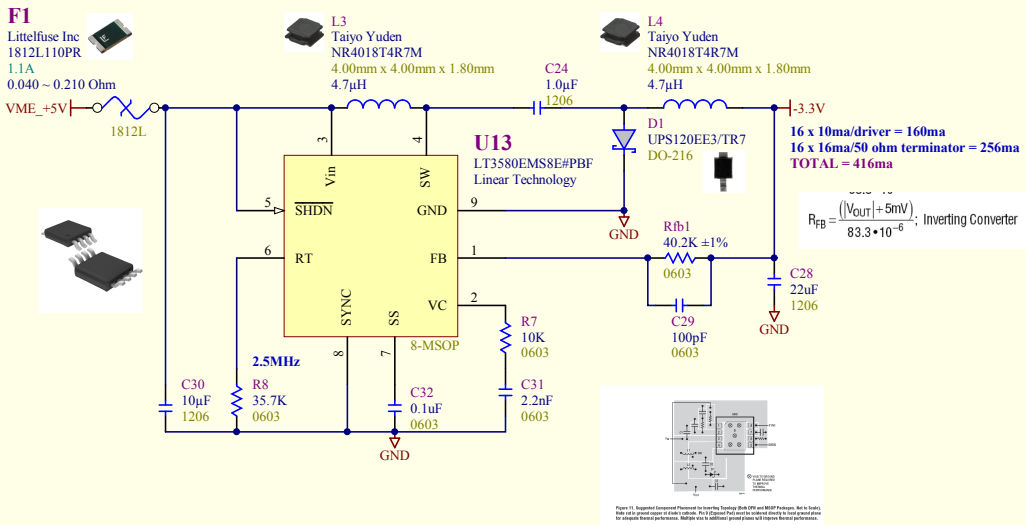


## VME - NIMIO32 - Voltage Regulators

| | | | |
|---|---|---|---|
| Revision 0 | Drawing #: 14 | | TRIUMF<br>4004 Wesbrook Mall<br>Vancouver, B.C.<br>Canada<br>V6T 2A3 |
| | Sheet #: 14 of 14 | Size: A | |
| | Drawn by: D.Bishop | Date: 15/10/2009 | |
| File: G:\AHW\VME-NIMIO32\ALTIUM\Altium\VME-NIMIO32 - Voltage Regulators.SCHDOC | | 6:39:19 PM | |